The Wireless World
THE PRACTICAL RADIO JOURNAL
25th Year of Publication

No. 827. FRIDAY, JULY 5TH, 1935. VOL. XXXVII. No. 1.

Proprietors : ILIFFE & SONS LTD.

Editor :
HUGH S. POCOCK.

Editorial,
Advertising and Publishing Offices :
DORSET HOUSE, STAMFORD STREET,
LONDON, S.E.1.

Telephone : Hop 3333 (50 lines).
Telegrams : "Ethaworld, Sedist, London."

COVENTRY : Hertford Street.
Telegrams : "Autocar, Coventry." Telephone : 5210 Coventry.

BIRMINGHAM :
Guildhall Buildings, Navigation Street, 2.
Telegrams : "Autopress, Birmingham." Telephone : 2971 Midland (4 lines).

MANCHESTER : 260, Deansgate, 3.
Telegrams : "Iliffe, Manchester." Telephone : Blackfriars 4412 (4 lines).

GLASGOW : 26B, Renfield Street, C.2.
Telegrams : "Iliffe, Glasgow." Telephone : Central 4857.

PUBLISHED WEEKLY. ENTERED AS SECOND CLASS MATTER AT NEW YORK, N.Y.

Subscription Rates :
Home, £1 1s. 8d. ; Canada, £1 1s. 8d. ; other countries, £1 3s. 10d. per annum.

As many of the circuits and apparatus described in these pages are covered by patents, readers are advised, before making use of them, to satisfy themselves that they would not be infringing patents.

CONTENTS

	Page
Editorial	1
Variable Selectivity	2
Recording Telephone Conversations	5
Random Radiations	6
New Output Valve	8
Current Topics	10
Feeders for Short Wave Reception	11
Broadcast Brevities	15
Listeners' Guide for the Week	16
Design of Output Chokes (Concluded)	18
Foundations of Wireless XXVI	21
Principal Broadcasting Stations	24

EDITORIAL COMMENT

Interference with Empire Reception

India Takes a Hand

IN our issue of 17th May we referred to the distressing interference with short wave reception caused by morse stations, complaints of which from abroad were reaching us in large numbers. In our issue of 26th April we also published a letter from Mr. H. R. Meredith, discussing conditions of reception in Patna, India.

Mr. Meredith has now written further to us on the subject and has forwarded a number of cuttings from Indian newspapers, showing how seriously the matter is regarded there. It will be remembered that in our Leader we said that mere complaints of interference served little purpose, as it was no help in locating the source of trouble and we appealed to readers to endeavour to identify the interfering stations wherever possible. It is, therefore, of particular interest to learn that the Director-General of Posts and Telegraphs in India is taking steps to this end, for he has recently issued a statement saying that the matter has been under observation for some time, and that it is realised that considerable interference is experienced, usually from telegraph stations. It is stated that identification of the interfering stations must first be made and then representations can be forwarded to the administrations controlling them. The Department of Posts and Telegraphs is taking this course of action.

We hope that this example will be followed elsewhere. If official bodies join in an effort to clear short wave broadcasting channels and particularly Empire transmissions from this interference, a very valuable improvement in reception conditions may be expected to result. Listeners all over the world should bestir, first themselves, and then their proper authorities, to action.

This does not mean that individual efforts to identify interfering stations should be slackened because authorities may be prepared to undertake the work officially. In many places the authorities may not have the necessary facilities, and in any case, successful efforts on the part of listeners to identify offenders and report them is the best possible evidence to the authorities that the listening communities view these interruptions of the short wave programmes seriously.

Propaganda Wireless

Proposals for this Country

A STATEMENT has recently been published to the effect that a scheme is on foot and approaching realisation for the establishment of a broadcasting station in England, the avowed object of which is to broadcast propaganda to counter continental broadcasts which are inimical to the interests of communities here.

However sympathetically such a proposal might be received it can be stated without fear of contradiction that there is not the remotest chance of a licence being granted for the establishment of such a station here, and those who are promoting the scheme are evidently doing so in ignorance of the position. The State has vested a monopoly of Broadcasting in the B.B.C., and this was done for the very purpose of ensuring that stations should not be set up by independent bodies.

It would be intolerable if concessions were made which permitted independent propaganda broadcasting when the very principle is offensive to national opinion in this country.

Variable Selectivity

Improving the Standard of Quality

By W. T. COCKING

SINCE the requirements of selectivity and quality are conflicting, it is clear that the ideal receiver would be fitted with variable selectivity in order that the optimum conditions for any and every station may be realised. The attainment of variable selectivity has hitherto proved difficult, but it is shown in this article that it is by no means hard to obtain a wide range of control if the design be carried out correctly.

AT a time when the attainment of the highest standard of quality demands the retention of modulation frequencies up to 10,000 c/s and the requirements of selectivity necessitate the sacrifice of frequencies higher than 4,000 c/s, it is clear that some compromise between selectivity and quality is essential. The most pleasing result to the ear is not secured by perfection of reproduction if this entails a large degree of interference, nor is it given by complete absence of all interference if this leads to the absence of the entire upper register from the reproduction. Most listeners prefer a compromise between the two extremes, for few will dispute that a pleasanter effect is obtained when the quality is sacrificed only as far as is necessary to reduce interference to the point at which it is not intrusive although it may not be completely inaudible.

It will be clear, therefore, that since the interference conditions are different for every station, and even vary frequently for each station, the optimum degree of selectivity must also vary for every station, and will be different for the reception of the same station in different localities. The ideal receiver would consequently be fitted with continuously variable selectivity so that its characteristics could be altered at will to suit the particular receiving conditions existing at any moment and in any district. This has

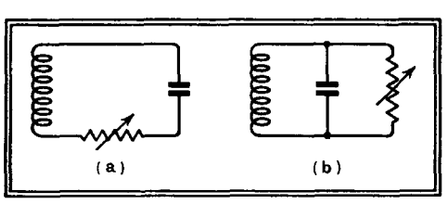

Fig. 1.—The selectivity of a single circuit can be varied by means of a series variable resistance, (a) of low value or a shunt resistance, (b) of high value.

long been recognised, but it is surprisingly difficult to devise a means of varying the selectivity of a receiver which is satisfactory from all points of view, and it is only recently that any considerable degree of success has attended the efforts of designers.

There are two distinct methods of obtaining variable selectivity. With the first, the inherent selectivity is of such an order that no serious degree of sideband cutting occurs, and it is increased when necessary by the application of reaction. This method has been adopted in the Single-Span receivers so far described in *The Wireless World*, and it has the great merit of simplicity. It is, however, open to the objection that the degree of selectivity obtainable is limited by the appearance of self-oscillation. With the second method, the inherent selectivity is made as high as the designer judges necessary for the avoidance of interference, and it is reduceable by some means for reception under conditions of moderate or little interference. A much wider range of control is possible in this way, and it is the means to be adopted which we have now to consider.

Methods of Varying Selectivity

Since the selectivity of a tuned circuit depends upon the $Q(=\omega L/R=\text{reactance}/\text{resistance})$ of the circuit, and the inductance must normally be fixed, an obvious method of varying the selectivity is to vary the resistance. This may be done in two ways: a variable resistance of low value can be connected in series with the circuit as shown in Fig. 1 (a), or one of high value in parallel as in Fig. 1 (b). Where only a single circuit need be controlled, either of these methods is satisfactory, although open to the objection that the sensitivity must vary also. When we remember, however, that the IF amplifier of a modern superheterodyne may contain as many as six tuned circuits, we can see that the control of one circuit alone is likely to have little effect. Even if its selectivity were completely destroyed, the remaining circuits would normally cause excessive sideband cutting. Each circuit must be controlled if satisfactory results are to be secured, and the difficulties of controlling six circuits by this means are obvious, for six variable resistances, each independently screened, and ganged for operation by a common spindle, would be needed!

Now, in IF amplifiers the tuned circuits are usually arranged in coupled pairs, and it is well known that the degree of selectivity obtained depends very greatly upon the coupling. If a pair of tuned circuits be coupled loosely together, the resonance curve takes the form shown by curve A of Fig. 2, while if "optimum" coupling be used, the curve is broadened to the shape shown by B. If the coupling be still further increased, two humps appear (curve C) and the system becomes of the band-pass type. Unless the coils are of low Q it is inadvisable to couple them very tightly, otherwise the trough between the peaks becomes very pronounced. On the other hand, unless the circuits have a large value of Q the selectivity with loose coupling will be low.

Ideally, therefore, the resistance of the

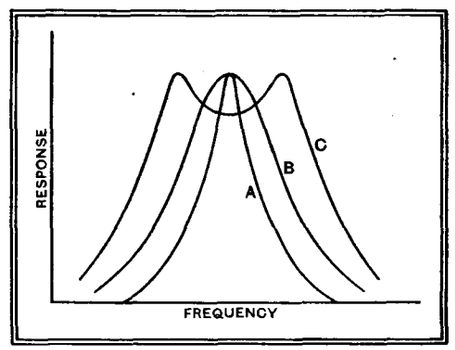

Fig. 2.—The resonance curve given by a pair of coupled tuned circuits varies with the degree of coupling. With loose coupling, it is sharp (A) but with optimum coupling (B) it is still single-peaked, while with tighter coupling (C) two peaks appear.

circuits should be increased with the coupling so that the double-hump appears only as a minor irregularity in an otherwise flat-topped response curve. So much depends on the band-width required, or, rather, the ratio of the resonance frequency to the band-width, that it is impossible to lay down any hard and fast rule, and experience shows that with a fairly high resonance frequency a variation of resistance is unnecessary for high quality sound reproduction.

Before going more deeply into this question it is as well to consider methods by which the coupling can be varied. The chief systems of coupling are shown in Fig. 3. With common capacity coupling (a) the band-width is controlled by the capacity of the condenser C, and it would appear that this would offer a simple means of obtaining continuously variable coupling by the use of a variable condenser for C. There are two objections to this,

Variable Selectivity—

however, and the first and less serious is the difficulty of obtaining a condenser of large enough capacity, since a variation of some 0.005 μF. would be needed. The second objection is that the response is not broadened by an increase in coupling an equal amount on either side of resonance. Referring to Fig. 4, if A be the response curve with loose coupling, that with tight coupling takes the form of curve B. It can be seen that if a change be made in the coupling, the receiver must be retuned so that the carrier frequency lies in the centre of the resonance curve.

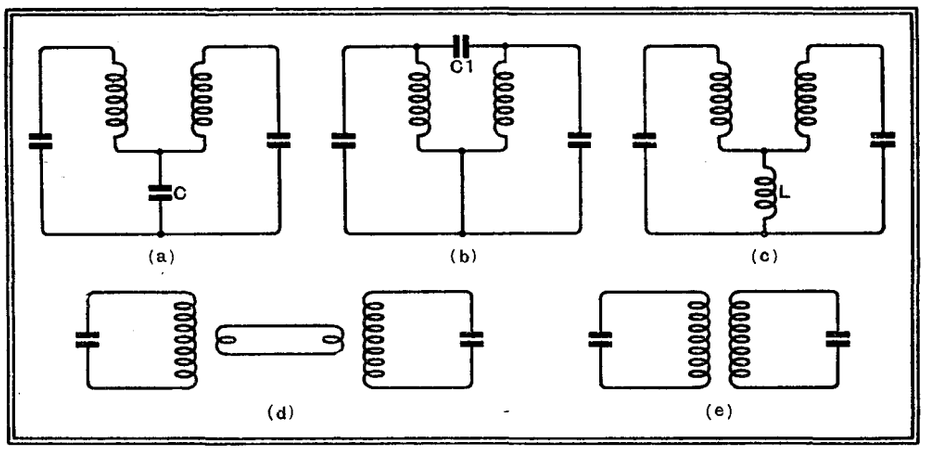

Fig. 3.—The chief methods of coupling circuits are shown here. At (a) the coupling is by common capacity and at (c) by common inductance, whereas with (b) a top-end capacity coupling is used. The link-filter is shown at (d) and mutual inductance coupling at (e).

Filter Couplings

When top end coupling is used (b) the capacity of the coupling condenser C1 is of more manageable proportions, being of the order of 1 $\mu\mu$F. This circuit still suffers from the objection that the peaks do not open out symmetrically about the resonance frequency, but to one side, as in Fig. 4. The second peak occurs on the other side of resonance, however, and this applies also to inductive coupling (c), which has also the objection that a small variometer L would be needed to alter the coupling. Another and at first sight attractive circuit is link coupling (d), but this again suffers from the same disadvantage in the manner in which the peaks open out.

When we turn to the fifth circuit (e) in which the coupling is provided by the mutual inductance between the two coils, we find that, as long as the coupling is due to this alone, the peaks open out symmetrically, and we obtain the type of curve exhibited by Fig. 2. This system of coupling is thus the only one which theoretically can give the desired results, and, as practice amply supports theory, it is accordingly the only method which need be considered.

Before we can consider the precise arrangement which we can adopt, it is necessary to decide on the coils which are to be used, for the degree of coupling necessary will depend on their efficiency. We shall, moreover, confine the discussion to intermediate frequencies of the order of 465 kc/s, for it is not difficult to demonstrate that with a lower frequency of some 110 kc/s it is desirable to increase the circuit resistance with the coupling in order to prevent the appearance of excessively prominent humps in the response curve. Moreover, the use of low intermediate frequencies is less prevalent than formerly on account of the greater ease of elimination of second-channel interference with a moderately high frequency.

In designing a coil we have not only to consider the efficiency of the coil alone but its efficiency when connected in circuit and used with its tuning condenser. At the frequencies under consideration, dielectric losses in the condenser, valve-holder and valve base are by no means negligible, and profoundly influence the choice of a coil. Compactness is also a point of importance, and it is hardly practicable to employ a coil with a larger overall diameter than one inch, nor one having a length much greater than this figure. The use of an iron-core of suitable type, therefore, becomes very desirable.

Owing to its comparatively low losses an air-dielectric trimming condenser is desirable, but types at present available of suitably small dimensions have a capacity no more than 65 $\mu\mu$F. For resonance at 465 kc/s with this capacity an inductance of 2,000 μH is needed. Coils having this order of inductance and unscreened gave resonance curves of the type shown in Fig. 5 when used with a VMP4 valve and having only the load of a valve voltmeter on the secondary. Curve A is for the case of untapped coils with optimum coupling, and a stage gain as high as 300 times is obtainable. The curve is not quite symmetrical, for it gives an attenuation of 7.5 times at 10 kc/s off resonance on one side as compared with six times on the other. The gain, however, is rather high for safety in a practical receiver in even one IF stage, and with two stages it would probably be impossible to maintain stability. It was reduced, therefore, by tapping down both primary and secondary, to 91.5 times, and the resonance curve then became B. A considerable improvement in selectivity is evident, for the attenuation at 10 kc/s off tune now becomes 16 times and 14 times for the two sides, and it is very clear that the losses in the external circuit are playing an important part.

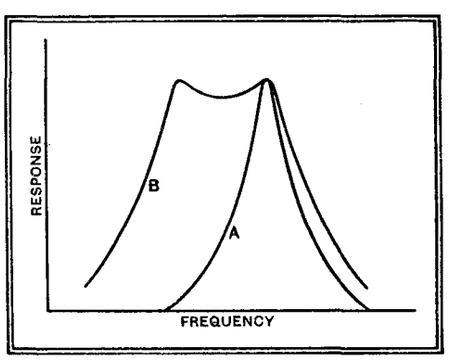

Fig. 4.—Certain methods of coupling give an unsymmetrical opening of the peaks. Curve (A) shows the results with loose coupling, and (B) when it is tight enough for the two peaks to appear.

When an attempt was made to screen a transformer of this nature, however, many difficulties arose. Owing to the large field of the high-inductance coils, the screen considerably lowered the efficiency, and it also proved difficult to obtain sufficiently loose coupling between the two coils in a can of reasonable dimensions, while the physical dimensions of the air-dielectric trimmers added to the difficulties. Now experience had shown that it was possible to produce a considerably more efficient coil, although of lower dynamic resistance, if its inductance were lower, for in the given winding space it was possible to employ greater sectionalisation. A coil of 500 μH inductance was found to be about the optimum when wound with Litz wire in ten sections. It is out of the question with such a coil, however, to employ an air-dielectric trimmer, for the capacity required to tune it to resonance is some 300 $\mu\mu$F.

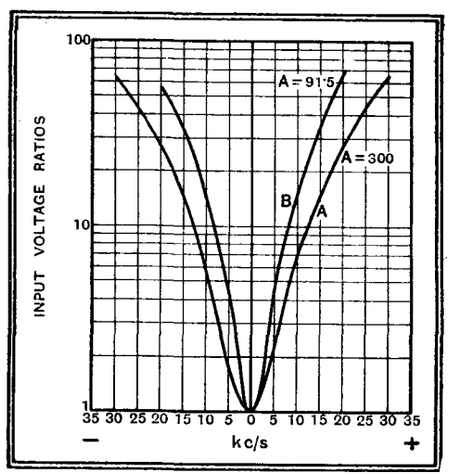

Fig. 5.—The results obtained with unscreened coils of 2,000 μH. inductance with air-dielectric trimmers are shown here for two different degrees of coupling.

The question arose, therefore, as to whether the more efficient coil would still be better if it were tuned with a mica-

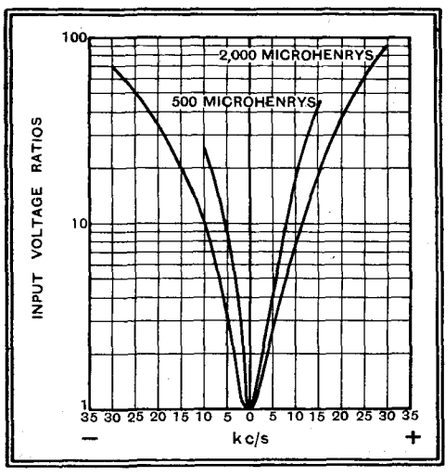

Fig. 6.—The improvement in selectivity obtained by using low-inductance coils is well brought out by these curves.

dielectric trimmer. The curves of Fig. 6 were consequently taken, and conclusively show that this is the case, the selectivity with the 500 μH coils being nearly double that with those of high inductance. Furthermore, on account of the smaller stray field, the losses introduced by screening are smaller, and less difficulty is experienced in obtaining loose enough coupling. The stage gain is lower, it is true, but this is an advantage rather than otherwise, and it does not fall as much as one would expect, since the external losses are of less importance, and one need not tap down the coils so far, if at all.

When the type of coil and trimming condenser had been thus decided, the question of providing a variable coupling between two circuits arose. It was soon found that the coils had to be more widely separated when screened than when in air, due to the restriction of the stray field of the coils by the can causing an increased interlinking of the flux. In theory, coaxial mounting with one coil movable would be ideal, for if the low potential ends are placed towards one another capacity coupling is at a minimum. Experiment showed this to demand an excessively large can with the particular coils employed, and it was soon found that the best arrangement was to pivot one coil so that it could be rotated from a position nearly at right angles to the other towards parallelism with it. An experimental model on these lines with both trimmers placed at the top for convenience of adjustment gave the series of curves shown in Fig. 7 with a VMP4 valve. The anode of this valve was connected to a tapping on the primary coil so placed as to give a ratio of 3:5, and the valve voltmeter was joined to a secondary tapping giving a ratio of 5:2.

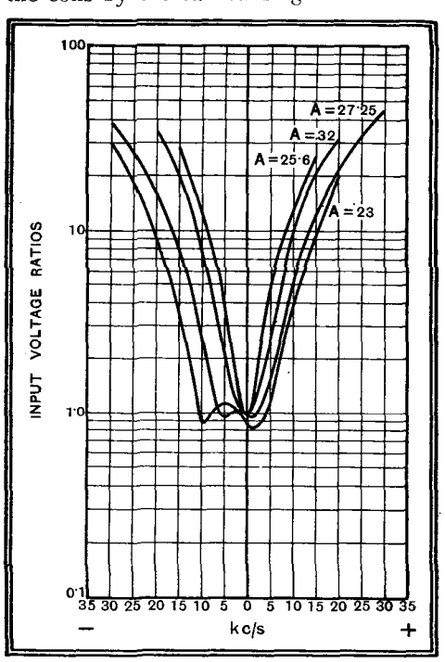

Fig. 7.—The results obtainable with a variable-selectivity transformer having excessive capacity coupling between the circuits. Note the lack of symmetry with tight coupling.

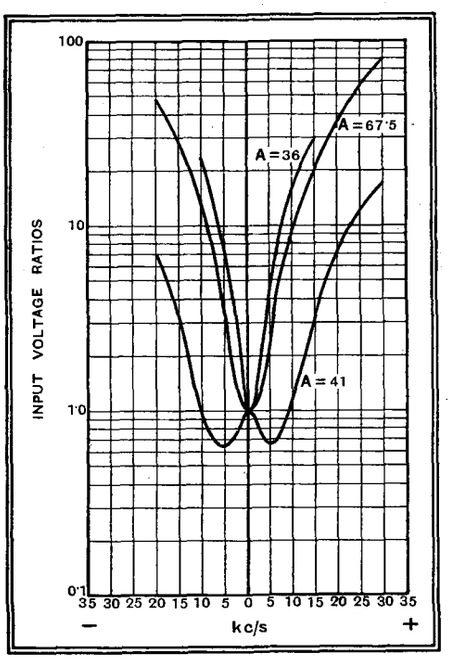

Fig. 8.—Symmetrical resonance curves are readily obtainable when capacity coupling is eliminated.

This series of curves exhibits two defects. In the first place, the amplification is rather low, for it never exceeds 32 times, and, secondly, the peaks do not open out symmetrically. This is a serious fault, and is due to the coupling not being wholly due to the mutual inductance, but partly to stray capacities. In order to avoid this it was found necessary to move the trimmers to opposite ends of the screening can and to bring the high potential leads out also at opposite ends. The use of a tapped secondary was also found unnecessary with these low inductance coils, and the use of the full winding for feeding the valve led to a considerable increase in amplification.

The results then obtained are shown in Fig. 8, and the gain at optimum coupling has jumped to 67.5 times, which is probably as much as can be used with safety in a two-stage amplifier. With the minimum coupling the gain is nearly half, but the selectivity is very good, the response at 10 kc/s off resonance being 16 times down on one side of resonance and 22 times on the other. The slight lack of symmetry in this curve is due to the trimming not being perfectly accurate. With the tightest coupling the peak separation is about 10 kc/s, and the curve is very nearly symmetrical.

At this frequency the peaks are not so prominent that any real difficulty is felt in the low selectivity position of the control. It can be seen, however, that at 110 kc/s the peaks would be very prominent and the trough between them excessive, so that a control of the circuit damping as well as of the coupling would seem to be essential. There are, of course, many possibilities, for several transformers will usually be employed together, and they need not all be controlled for selectivity. It seems likely that the best results will be secured by the combination of two transformers having variable coupling with one permanently set at optimum, or slightly above optimum, coupling. The precise arrangement adopted, however, will naturally vary in different cases, depending upon the results required, the number of transformers employed, and the external damping imposed upon them.

It can be seen, however, that there is no essential difficulty in obtaining selectivity characteristics which can be varied over a wide range, provided that the intermediate frequency employed is not too low. The use of variable selectivity is likely to add very considerably to the performance of a receiver, particularly in quality of reproduction, and the importance of the development can hardly be over-emphasised. It is likely to become widespread in the future.

New Mullard Sets

DETAILS are now available for publication regarding three new Mullard receivers. All are upright table models, two being for battery operation and embodying a single HF stage. Screened pentodes are employed in a very effective manner as detectors in both sets while pentode output is employed in the MB3A and Class "B" in the MB4.

The third set, Model MU35, is a superhet-

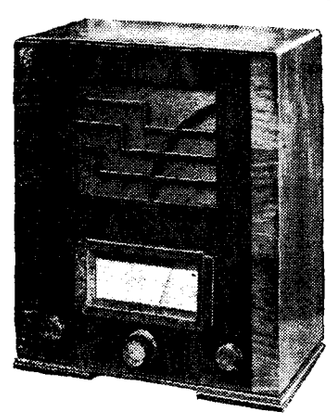

This new set, the first Mullard mains model, is for universal AC-DC operation.

erodyne for universal mains operation, and includes built-in filters to minimise mains interference as well as a continuously variable tone control. Stations shown on the tuning scale are grouped geographically in a new and ingenious manner. This set costs 12 guineas.

Recording Telephone Conversations

A Speech Recorder with Delayed AVC

The Dictaphone Telecord in use. Below the wax cylinder and recording cutter mechanism is the amplifier with automatic level control. Push button controls are just in front of the instrument.

THE difficulty in recording telephone conversations has always been to provide for the very large difference in level between the incoming and outgoing conversations. The trouble is now overcome by the use of delayed automatic volume control using vari-mu valves. The apparatus, which is mains driven, is merely connected across the telephone line

HOW often has the business man sighed for some device which will record his telephone conversations—at any rate, the more important ones? The personal contact which the telephone provides will often clinch a deal, but unfortunately the fleeting voice has gone and it is necessary to confirm the conversation in writing, and for this to be agreed by the other party.

A satisfactory record of the conversation saves all this bother, although if the idea gains popularity it may be necessary to preface one's telephone remarks with the statement that nothing in the forthcoming conversation shall be considered binding!

Let us look at another aspect of the question. In the old days numerous messages were handed in and sent by telegraph. The transmission was by morse key and the messages were taken down at the other end by hand. This was not fast enough, and automatic machinery began to take its place, enabling high-speed telegraphy of one hundred words a minute or more to be obtained. Side by side, however, with this development, the telephone made rapid strides, and the greater convenience, coupled again with the personal contact of the telephone, led to the habit of 'phoning news stories, which were taken down in shorthand at the receiving end.

Minutes count in a long-distance telephone conversation, however, and although the quality of the transmission has improved considerably in recent years, it is still necessary to restrict the speed of talking to fifty or sixty words a minute if satisfactory transcription is to be obtained. This is by no means as fast as one can talk, and the new "Telecord" attachment enables telephone messages to be recorded at 150 words per minute.

Then there is also the advantage of recording a telephone conversation when the wanted subscriber is unavoidably absent. Suppose you are waiting for some information regarding certain business matters which it is essential that you should have accurately and correctly. At present you have to wait for the call to come through, even though you may have other work which demands your attention. With the Telecord all you do is to tell your secretary to record the information as it comes through; you can then go away with a comfortable mind, knowing that every word will have been faithfully preserved.

This sounds rather a glowing account, but it is, nevertheless, true. The apparatus has been developed by the Dictaphone Company, for whom the writer had pleasure of acting during the early stages of development. The dictaphone, of course, is a well-known business adjunct and has proved its efficiency over many years. It would be as well, however, first to consider for a few moments the dictaphone itself before dealing with the recording.

In short, the dictaphone is a machine which records spoken conversation on a wax cylinder. This cylinder rotates about ninety revolutions per minute, and the recording is done by a sapphire point attached to a mica diaphragm operated by the sound waves produced by the voice speaking into a mouthpiece. A hill-and-dale cut is used which enables a very fine pitch of some 160 grooves to the inch to be used, in consequence of which the dictaphone cylinder will run for ten minutes continuously.

Normally, of course, the dictaphone is used for dictation of letters, articles, etc. —this article was dictated to the dictaphone—and the recorded speech is subsequently transcribed by a typist on a similar machine in which the cutting sapphire is replaced by a reproducing point which re-converts the undulations on the wax into air waves. The record can be played again and again, and any part which is not quite clear can be repeated *ad lib*. When the record has finally been transcribed the cylinder can be shaved and used again, having a life of something like one hundred shavings before it becomes too thin for further use.

Now, in the Telecord the mechanical cutting mechanism is replaced by an electrical cutter. The basic parts of the mechanism are the same and the same delicate movement is incorporated, but the stylus is operated electrically instead of by sound pressure direct. A suitable amplifier is introduced between the telephone line and this recording head, so that the speech currents are magnified sufficiently to produce the necessary cut.

Recording Telephone Conversations—

All this looks very easy, but there is one serious disadvantage. The ear is much more accommodating than the record, and some means has to be found to take care of the very large difference in level between the incoming and outgoing conversation, particularly on a distant line. The far subscriber may be rather weak although perfectly clear. If the recorder is arranged to give satisfactory signals of this weak signal it will blast very heavily on the near signal, while if the amplifier is arranged to suit the loud signal the weak signal is not received satisfactorily.

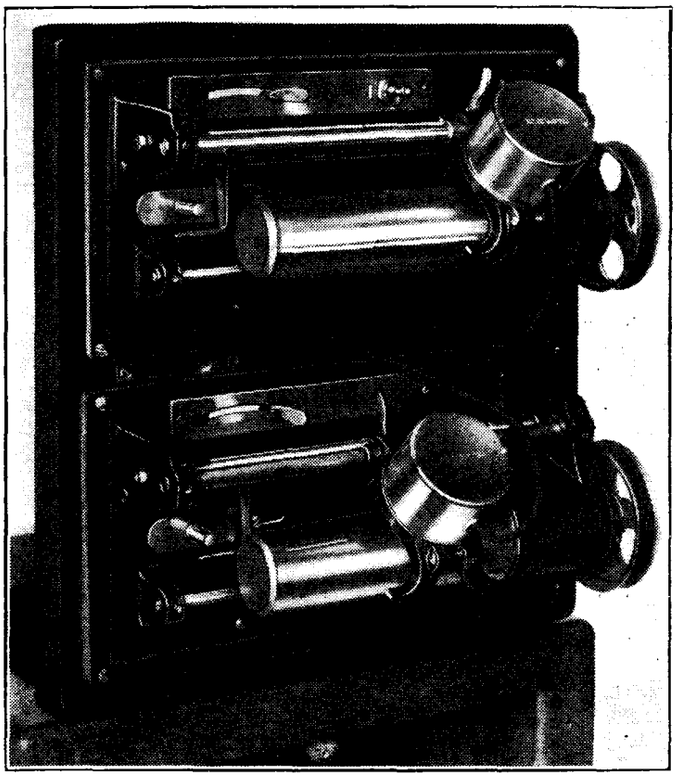

A view of the mechanism of the latest type of Telecord, in which the provision of two cylinders allows for continuous recording over an indefinite period.

It is necessary, therefore, to arrange some form of control, and clearly this must be automatic in character. It is quite impossible to do it manually. Consequently, a form of automatic volume control was devised using vari-mu valves for the low-frequency amplification and controlling the volume by the speech itself. It seems at first that this would not be practicable, but in point of fact if a reasonable delay is arranged on the control it operates very successfully. In a recent issue of *Wireless World* (May 10th, 1935) an article on volume expansion appeared. The process used in the Telecord is the reverse of this, being in fact a volume contractor, and so effective is the arrangement that it is possible to shout into the telephone and immediately afterwards to whisper and yet both records come out clearly and distinctly with only a small difference in volume.

How Calls are Recorded

The apparatus is mains driven and is merely connected across the telephone line. As far as the ordinary telephone conversation is concerned, no difference is made whether the speech is recorded or not. The call is put through in the normal way, and, indeed, the distant subscriber does not know he is being recorded unless the calling subscriber chooses to advise him of the fact. The title photograph with this article shows a report in progress. The recipient of the call listens to the conversation in the ordinary way, interjecting remarks where necessary or asking for a repeat if any phrase is indistinct. Beyond this he has nothing to do. The Telecord is faithfully capturing everything that is said at both ends.

A 24-hour Service

The latest models are provided with two mandrels with an automatic control between them. The first cylinder runs for the normal ten minutes, but just before the end the second mandrel is started up and for a period of some fifteen seconds the two cylinders run together, giving an overlap. The first cylinder then stops, leaving the subsequent conversation to be recorded by the second cylinder. While this is in progress the first cylinder is removed, replaced by a freshly shaved one and sent away to be transcribed. In this way a complete 24-hour service can be maintained, and this is actually done in some news offices.

The Telecord is not a toy for the amateur. It costs £195 complete, but its cost is repaid time and time again when it is put into use by big firms, news agencies, etc. It is fully approved by the Post Office and a nominal rental of 1s. 3d. per quarter is all that is required from the Government. Any readers who are interested should go and see the models on show at The Dictaphone Company's offices in Kingsway, where they can hear for themselves the remarkable clarity of the recording.

Random Radiations

By "DIALLIST"

In the West Country

LAST week I spent some days in the West Country in a house where a first-rate AC mains superheterodyne was available, and you can rest assured that I made full use of my opportunities of discovering what summer-time reception was like in those parts. In case West Country readers would like to have an idea of the locality in which I was, let me say that it was some miles, though not a thousand miles, from Okehampton. Rather to my surprise, considering the adverse reports that have appeared of poor reception of Droitwich in the west, I found that this station was by far the best of all. Its transmissions were received to perfection, without the slightest trace of fading or background from medium-wave stations. Next in order of merit was the West Regional. The West National was impossible, the wobbling effect of shared-wavelength working being very much in evidence. The only other Regional at all well received was London, though this was apt to indulge in the kind of fading with which automatic volume control cannot cope. Few foreigners were well heard. The best were Radio Paris, Luxembourg, the Poste Parisien, Rome, Breslau, Leipzig, Brussels No. 1, and Fécamp.

Local Interference

Another surprise was to find that in the little village in which I was staying there was a considerable amount of man-made interference at times. It has recently been connected up to the Grid system, and I imagine that various residents have unwittingly installed domestic appliances of the radiating kind. I was told that the amount of interference was increasing, and I instructed my host how to bring the matter to the notice of the Post Office authorities. In all probability the trouble can be set right with the aid of a few shillings-worth of condensers in this home or that, but if it isn't tackled soon it will assume serious proportions. This leads me to repeat the plea already made to readers of these notes: Don't purchase any piece of domestic electrical apparatus until you have made quite sure that it is non-radiating. If wireless users would adhere strictly to this rule the pressure automatically exerted upon manufacturers would be far more effective than any amount of regulations.

A Sample of the Golden Voice

NOT so very long from now we shall be able to learn the exact time by dialling TIM on our telephones, when there will be an immediate response from an automatically operated gramophone record. Everyone knew that there had been a country-wide competition amongst telephone girls to find the possessor of the ideal voice for making these gramophone records; but it was a brilliant idea on the part of somebody in the Programme Department at Broadcasting House to give listeners a

sample of what is to come by bringing Miss Ethel Cain, the winner of the competition, to the microphone the other night. For forty-five minutes she acted as announcer to Henry Hall's Dance Band, and I am sure that everyone who heard her must have agreed that the judges had made a wise selection. Lots of people, I think, will dial TIM more for the pleasure of hearing that delightful voice than because they are uncertain of the precise time.

Radio Buses

THE Parish Council of Amersham has, I observe, expressed its disapproval of radio sets in motor buses, and has instructed its Clerk to write to the Ministry of Transport suggesting that these should not be permitted. Their reasons for coming to this conclusion seem to be twofold. They fear, in the first place, that the driver might be unable to hear signals from the conductor, and, secondly, that his attention might be distracted from the work in hand at a critical moment by some particularly thrilling passage. Against this it is urged that the driver could not hear what came through the loudspeaker when the vehicle was travelling, since he is completely isolated from the interior of the bus in his own little compartment. Somehow my sympathies are rather with the Parish Council. I cannot help thinking that the driver of a big bus has such a difficult job and must concentrate so much upon his task that anything which might distract him is undesirable. His position is, after all, very different from that of the driver of the much more easily manœuvred private car. Then, again, there are the passengers to be considered. Fond as I am of listening to broadcasting, I should look forward with a certain amount of horror to a long journey in the course of which I had to listen to the outpourings of a loudspeaker whether I wanted to do so or not. How do you feel about it?

A Jolly Commentator

ONE of the best commentators that we have on sporting events is Major Faudel-Phillips, who, unfortunately, makes his appearance before the microphone only once a year. He describes the jumping in the final stage of the King's Prize at the Royal Horse Show at Olympia, and, whether you are a horsey person or not, I am sure that you can't help enjoying every word that he says. His style of commentating is entirely his own—little anecdotes about the horses and their riders fill up any odd moments, and once a horse is in the ring he makes us almost see what is happening. "Coming to the first jump now. Over! But it was a lucky one. He'll crash something in a moment. He's over the second, but I'll bet you he'll be for it soon. There, now, I told you so. Never rose an inch. Took the wall by the roots." Or when some brilliant performer is at work: "Over the parallel bars. By Jove, he never even knew they were there. Over the stick heap. Cleared it by about a fortnight." The B.B.C. should give us more of Major Faudel-Phillips.

Broadcasts *We* Don't Hear

AT 10.45 on a weekday morning mere man is usually engaged in earning the family's daily bread, though his better half may be busy in devising palatable ways of serving it up. Comparatively few male listeners hear the talks on farmhouse cookery which Mrs. Arthur Webb delivers at the hour just mentioned; but some of us have already seen and tasted the results in the form of quaintly named but delectable dishes. Myself, if I were able to do so, I would single out Mrs. Webb to receive some high distinction in the next Honours List. She is performing a noble service. All of us, as we move about the country, have come across now and then the typical and delightful viands of this district or that. Mrs. Webb travels about deliberately seeking them out for our benefit. When she finds some super-dish she wheedles the recipe out of the farmer's wife who made it. And many of these recipes, though centuries old, have never been printed. They are just handed down through the generations from mother to daughter. For collecting them and bringing them to the light of day Mrs. Webb, as founder of the science of cookery lore, deserves to take her place amongst the great historians and antiquarians.

Scraps versus Chunks

SOMETIMES I wonder whether those who build our programmes do not make a mistake in allowing some of the items to be too long. The other night, for instance, we had a whole hour of Richard Tauber, who is as fine a singer as one could wish to hear. But it is exceedingly difficult for one man to keep things going for as long a time as this, and, much as they may have admired his performance, I'll wager that many listeners turned to something else before it was over. Two half-hours of Richard Tauber on different nights would have been magnificent.

One of the difficulties in balancing programmes is to find ways of keeping them bright without letting them become scrappy. In other words, the happy mean between chunks and scraps.

The American Way

In the United States it is the exception for any item, however good it may be, to last for more than half an hour, and the great majority of broadcasts are limited to fifteen or twenty minutes. This would probably make the programmes too scrappy from our point of view, though there is no question that they are bright. A good play can certainly run for an hour, though I don't think that this time should be exceeded.

LIGHTNING CALCULATOR

Frequency-Inductance-Capacity Problems Solved

RAPID and accurate calculation of the many circuit elements and characteristics is a matter of importance to every experimenter and is essential to the set and component designer. A form of slide rule has been produced by The American Radio Relay League, Inc, which meets many requirements in an admirable fashion. It consists of a card carrying four fixed scales, in the centre of which are pivoted a hair-line indicator and two rotatable cards, of which one bears two scales and the other three. By operating the scales in the manner lucidly described in the instructions many wireless problems can be rapidly solved, for the calculator deals not only with the conversion of frequency to wavelength and *vice versa*, but the capacity or inductance necessary to tune a given coil or condenser to any wavelength can be obtained in a few seconds. This does not exhaust the capabilities of the instrument, however, for it may be employed for all manner of inductance calculations, including not only the determination of the inductance of a given coil but also the design of a coil to have a given inductance.

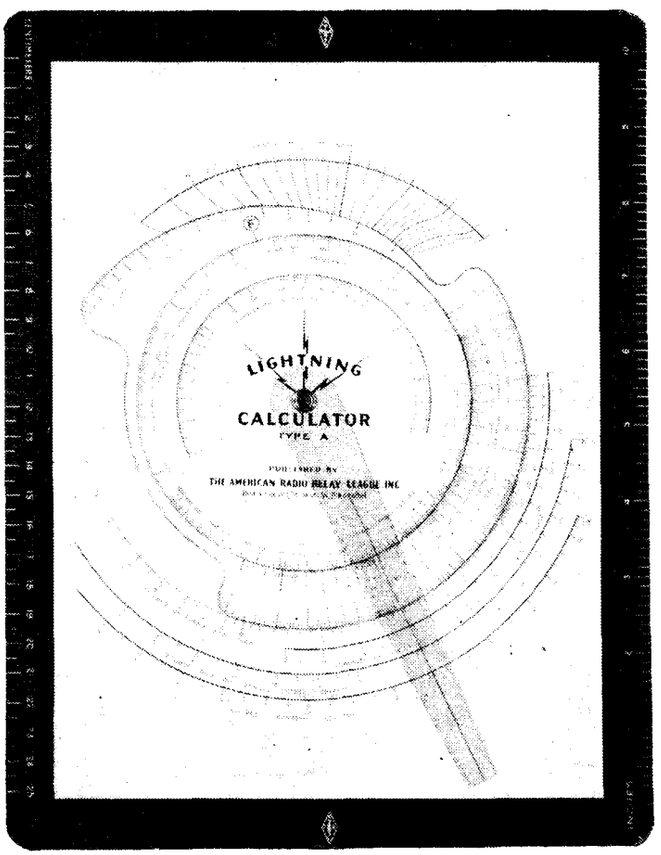

The only defect from a British viewpoint is that the wire scales are for B & S gauge wire, whereas Standard Wire Gauge is universally used in this country. This is not of great importance, however, for these scales do not enter into the direct calculation, and are added purely as a matter of convenience to show the largest gauge which can be wound into a given space. This information can be obtained from wire tables.

The Calculator is handled in this country by F. L. Postlethwaite, of 41, Kinfauns Road, Goodmayes, Ilford, Essex, and is priced at 4s. 6d. post free.

New Output Valve

Simple and Ingenious Scheme with Numerous Advantages

By M. G. SCROGGIE, B.Sc., A.M.I.E.E.

WHAT amounts almost to a new method of LF amplification is employed with the new American 6B5 mains valve, although its method of operation is in some respects reminiscent of the Class "B" system; it appears to offer important advantages in several directions.

PROGRESS in output valve design is of two sorts—improvement of particular types of valve, and development of new types. Thus, on the one hand, the simple triode in use fifteen years ago is still going strong in a vastly improved condition; and, on the other, several new types have meanwhile appeared—pentode, QPP, Class "B," and some others.

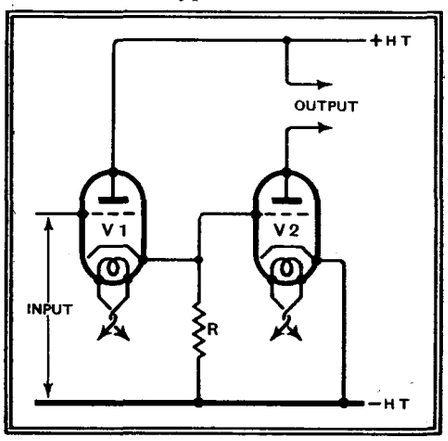

Fig. 1.—The operation of the 6B5 valve is best explained by dividing the various electrodes into two separate valves.

None is completely satisfactory. The triode is capable of giving quite good results where efficiency is disregarded. Four-fifths or more of the power fed to it is wasted before it reaches the loud speaker. Because it must be worked with the grid always negative the best parts of the characteristics are "out of bounds," and those available are far from straight and distortionless.

The pentode has come into general use except for the more expensive sets; the admittedly poorer quality of reproduction is tolerated for the sake of the greater efficiency—about double that of the triode—and sensitivity. Even so, two-thirds of the power supplied is wasted when the full output is being drawn; and, of course, during programme intervals it is all being wasted. Battery power is so extravagantly costly that QPP was introduced to minimise this waste. QPP has fluctuated in popularity and its stock seems now to stand rather higher than it did when it was hurriedly abandoned in favour of Class "B." But it still demands careful attention to details in order to give good results.

Class "B" originally dispensed entirely with grid bias, and worked the valves very efficiently. But it had serious drawbacks; owing to the flow of grid current it was necessary to use a small power valve as driver; and because the grid current constituted an extremely variable load the driver had to be worked very inefficiently and this made heavy inroads on the power saved in the output valves proper. Two output valves (though usually in one "bottle") are necessary, to cancel out the worst of the distortion, but at best the quality is not regarded as unimpeachable. And unusually expensive input and output transformers are needed.

So the earlier Class "B" was modified by a partial reintroduction of grid bias, and some improvement was gained at a slight sacrifice of simplicity.

This introduction will serve to direct attention to the several merits of a new type of valve now being produced in America. It is extraordinarily simple, yet ingeniously avoids most, if not all, of the disadvantages just mentioned in connection with other systems. Although it consists of two separate valves in one bulb this union is entirely justifiable, as the two form one unit which must be designed as a whole and which can actually be substituted for pentodes in existing sets. But the 6B5 (as it is styled) can perhaps be more rapidly understood if it is drawn as two separate valves (see Fig. 1).

Self-Biasing

The novel feature about V1 is that the usual cathode biasing resistor R serves also as the coupling resistor. The grid of V1, being negative with respect to its cathode, takes no grid current, so any ordinary coupling from the preceding valve is legitimate. The grid of V2, however, is obviously positive with respect to its cathode by the same number of volts as the negative bias on the grid of V1. There is, therefore, quite a considerable grid current; in fact, the grid-to-cathode resistance is so low that R, as a separate component, is not needed. The valve V2 serves the purpose. The output is taken from the anode of V2 in the usual manner.

The rather remarkable result, then, is that no coupling or grid bias components are required for the two valves. They are designed in such a way that with a negative bias for V1 equal to the chosen positive bias for V2 the anode current of V1 equals the grid current of V2 (Fig. 2).

One obvious question to raise at this stage is what has become of the usual by-pass condenser across R? The object of a condenser is to prevent signal voltages from appearing across the bias resistance and being passed back in opposition to the input signals. It is generally made large—25 or 50 mfds.—so as to act as a short-circuit to signals of all frequencies. But if so, in the system shown, it would likewise prevent any signal voltages from being passed forward to V2, thus effectually putting the whole arrangement out of business. So the condenser is omitted and the resulting reverse feed-back is overcome by feeding some extra signal volts to the input. It will be realised that as V2 is worked with the grid considerably positive the valve has a very much higher amplification factor than the ordinary output triode, so the signal voltage developed across R is not enough to make an unreasonably high input necessary; it is, in fact, much the same as that of a large pentode—about 15 volts for 4 watts output.

Not only so, but this reverse feed-back is actually the secret of the exceptionally small harmonic distortion in the valve; for it acts in such a way as to balance out most of the inherent curvature of the valve characteristics.

Advantages under the heading of distortionlessness do not end at this point. Although V2 works in grid current, and thereby might be expected to be no better off than Class "B" valves, the position is really quite different. Class "B" valves have one foot in each camp; each signal swing carries them from heavy grid

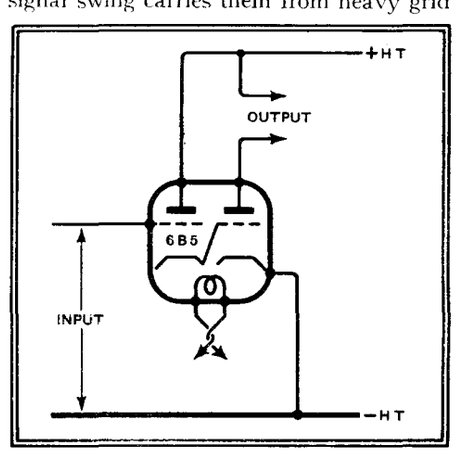

Fig. 2.—The new valve and its connections. Bias for each section of the valve is obtained without external aid.

New Output Valve—

current to none at all. In addition, the anode characteristics are not even approximately straight, and it is necessary to depend on the two valves balancing one another exactly so that the resulting intolerable distortion does not appear. In practice it is very difficult to avoid a small residuum of higher orders of harmonics which give the characteristic fuzziness, on piano programmes more especially.

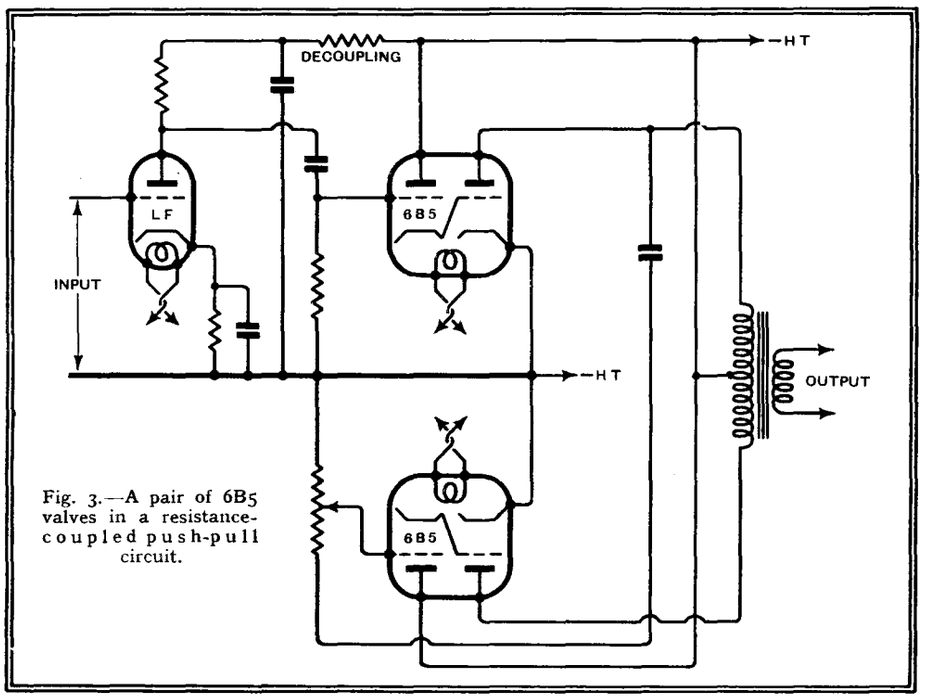

Fig. 3.—A pair of 6B5 valves in a resistance-coupled push-pull circuit.

The 6B5 has quite exceptionally straight characteristics; there is therefore no *necessity* for balanced push-pull working; and the grid of V2 takes current all the time, so there are no abrupt discontinuities.

Still another feature is that the grid of V1 does not begin to take grid current until the input voltage far exceeds that for full output. Instead of the usual sudden severe distortion due to grid current when full load is exceeded even slightly, distortion increases fairly gradually in the 6B5; so exceptional peaks can be handled without "cracking."

The absence of coupling components and the practicability of resistance-coupled push-pull are yet further aids to high-quality output. Fig. 3 shows how a pair of 6B5s can be driven in push-pull from a single valve with resistance coupling. As the 6B5 does not share in the heavy fluctuations of anode current of the Class "B" systems, extra-good constancy of HT voltage is not needed; and push-pull is quite optional, but on the other hand, quite advantageous where large outputs are required. It is claimed that a pair of valves gives an output of 20 watts into a load of 10,000 ohms from anode to anode, and the efficiency of the stage is nearly 50 per cent.

A good feature is that the output is little affected by anode load within wide limits; unlike the pentode. The normal load impedance for a single valve is 7,000 ohms, but the performance is reasonably good between 4,000 and 10,000 ohms.

One cathode being "up in the air," indirect heating must be adopted, so it does not look as if this type of valve can be very readily adapted for battery operation (except car battery!). Still, one never knows; it would not be the first indirectly heated battery valve if it were produced in that form.

The following are the leading data of the 6B5:—

Heater volts	6.3
Heater amps	0.8
Output anode volts	300
Input anode volts	300
Output anode milliamps.	45
Input anode milliamps.	8
Grid bias (external)	0
Mutual conductance, milliamps. per volt	2.4

American 6-pin base.

	Single-valve.	Push-pull.
Optimum load resistance, ohms.	7,000	10,000 anode to anode.
Power output, watts, for 5% total harmonic distortion	4	10
Input volts, RMS, for rated output	15	38 grid to grid.
Sensitivity, milliwatts/Vg^2	17.8	7
Efficiency (including input anode feed)	25%	31.5%

If run with external negative bias, or reduced input anode volts, the output voltage may be raised, giving these results in a push-pull circuit:—

Output anode volts	400
External grid bias volts	−13
—*or* Auto-bias resistor, ohms	140
—*or* Reduction of input anode volts to	270
Output anode milliamps. (no signal), per valve	40
Input anode milliamps. (no signal), per valve	6.5
Load resistance, ohms, anode to anode	10,000
Power output, watts, for 5% total harmonic distortion	20
Input volts, RMS, for rated output, grid to grid	60
Sensitivity, mW/Vg^2	5.5
Efficiency (including input anode feed)	43%
Efficiency (output anode feed only)	50%

BOOK REVIEW

Interference Suppression, 5th edition. By the Research Department of Belling and Lee, Ltd., under the direction of E. M. Lee, B.Sc., Assoc. I.E.E. 70 pp. with numerous diagrams and illustrations. Published by Belling and Lee, Ltd., Cambridge Arterial Road, Enfield, Middlesex. 1935. Price 1s.

The latest edition of this useful publication is more ambitious than its predecessors, and deals exhaustively with man-made interference and its suppression from every aspect. A sharp line of demarkation is drawn between cures effected at the source and those that may be applied by the listener. The general treatment is a happy compromise between technical and non-technical, the latter style having wisely been adopted in dealing with remedies that might be applied (much more often than they are) by wireless users. In particular, the fullest and clearest instructions are given for fitting condenser suppressors at the point of entry of the mains. Contributors to this journal have on more than one occasion implied that no listener is entitled to complain of interference until he has tried this inexpensive and generally effective palliative.

A good deal of interesting general information on the nature of interference itself is given, and the differences between the various types—mains radiated, conducted, direct radiated, and re-radiated—is clearly explained.

Several pages are devoted to anti-interference aerials and transmission lines, particularly to the well-known "Rejectostat" system which is manufactured by Kolster-Brandes, Ltd., in modified form specially for Belling and Lee, Ltd.

H. F. S.

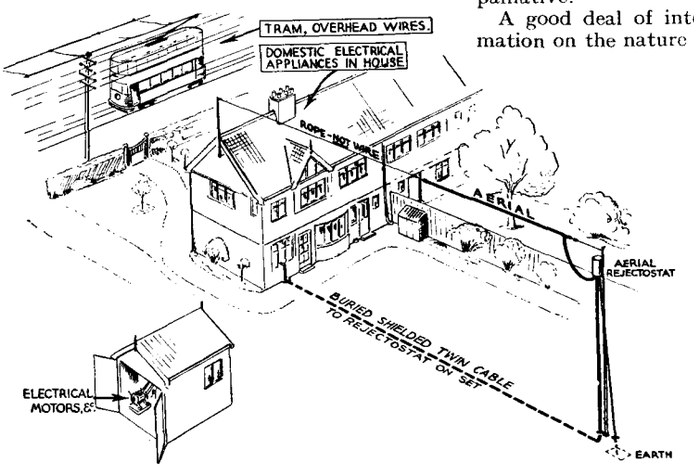

One of the explanatory sketches from "Interference Suppression"; in some cases equal immunity from interference and greater signal pick-up would result from mounting the aerial "Rejectostat" at the foot instead of at the top of the mast.

CURRENT TOPICS

Events of the Week in Brief Review

French Giants Testing

THE new French Regional stations, writes our Paris correspondent, are at last emerging from the "land of promises." Lille-Camphin and Lyons-Tramoyes have begun testing.

School Television

"THE introduction of wireless and visual apparatus will certainly be more profitable than Latin," said Provost Murray, commenting on the decision of Mr. W. B. Black, headmaster of Drunmore School, to install television apparatus next term.

Tête-à-Tête

M. ANDRE TARDIEU, famous French ex-Prime Minister, returning from a night sitting, got in a radio taxi and switched on for a "change of ideas." Came the announcement: "You will now hear a record of this evening's speech by M. André Tardieu. The politician came home with a beam on his face, exclaiming "how much he had enjoyed listening to a good speech."

5-metre Field Days

THE 5-metre field day habit is spreading. On Sunday, July 14th, the Kentish Town and District Radio Society will conduct experiments in the open with portable stations G6TV and G2XJ on the 56-megacycle band, using telephony and I.C.W.

On the same day the Golders Green and Hendon Radio Society will conduct 5-metre D.F. operations near Ivinghoe Beacon, Bucks.

Snowdon 5-Metre Record

ALL amateur records for ultra-short-wave working appear to have been broken by Mr. Douglas Walters, G5CV, during his tests from the summit of Mount Snowdon on Saturday and Sunday last, when Mr. J. Sharman picked up at the signals at Stoke Poges, nearly 180 miles away.

It had been arranged to erect a beam aerial directed towards London between 6 and 7 p.m. on Saturday, but owing to delay this was not in operation until the second period scheduled for its use—9 to 10 p.m.

Reports were also received from Bristol and Ormskirk. In the case of the latter two-way telephony working was obtained with a car transmitter. It is possible that reception reports from still greater distances may follow within the next few days.

Mr. Sharman told *The Wireless World* that he first picked up G5CV's call sign at midnight on Saturday. At 1.30 a.m. he appeared to shut down, but resumed transmission at 9 a.m. on Sunday. These times were confirmed by Mr. Walters in a telephone message on Sunday night.

The receiver at Stoke Poges was a superhet, with three intermediate stages. The antenna consisted of eight half-wave aerials, all in the same plane. No reflector was used.

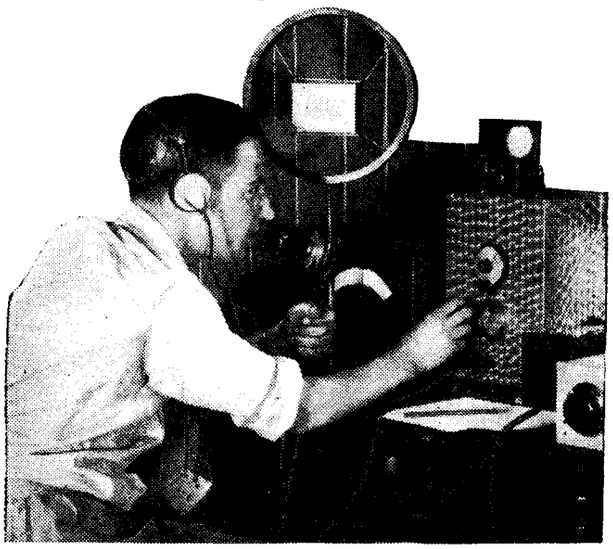

180 MILES ON ULTRA-SHORT WAVES.—Mr. Douglas Walters, G5CV, with apparatus rigged up in a small hut at the top of Snowdon, 3,600 ft. above sea level. Morse signals were picked up on Saturday and Sunday last at Stoke Poges.

R.A.F. Display

WIRELESS played a large part in the R.A.F. Display at Hendon on Saturday last. A full illustrated record of the Display appeared in yesterday's special number of our associated journal, *Flight*.

Japan Calling

WITH the object of keeping Japanese residents abroad in touch with home affairs, Tokio is transmitting every Sunday at 12.30 a.m. on wavelengths of 30.416, 22.208 and 15.645 metres. It is hoped that the transmissions will be easily heard in Britain.

Huizen Closes Down

HUIZEN ceased transmission on Monday last, July 1st, and all programmes on the 1,875-metre wavelength are now radiated by the 75-kilowatt Kootwijk transmitter.

A new company, partly owned by the Government, called the "Nozema," is taking over the control of Dutch broadcasting. Eventually new long-wave and medium-wave stations will replace Hilversum and Kootwijk.

German Amateurs Rejoice

GERMAN short-wave amateurs staked a Press demonstration last week in the Berlin suburb of Dahlem. Vice-Admiral Gross, President of the Association, described how, until the advent of National Socialism, transmitting licences had been restricted to clubs.

Over three hundred licences have now been issued to private amateurs, and it is hoped to double the number within a very short time.

Truly Portable

A REAL lightweight portable, small enough to be carried anywhere or to be slipped into a corner of a suitcase during summer excursions, is announced by Handisets, Ltd., of Bromley, Kent. Three of the new Hivac midget valves are employed, and the oak case in which all the apparatus, including frame aerial and a single-earpiece 'phone are contained, measures only 9¾in. high, 5in. wide, and 4in. deep.

The makers claim that six stations are receivable under normal conditions and that, as anode consumption amounts only to 1 mA., the miniature Drydex HT battery fitted has a life of about four months. It is hoped that a fuller description of this interesting set, which costs £3 15s., will be published next week.

International Broadcasting Union

M. MAURICE RAMBERT, a director of the Swiss broadcasting organisation, has been elected President of the International Broadcasting Union in succession to Vice-Admiral Sir Charles Carpendale.

NEW PRESIDENT.—M. Maurice Rambert, of the Swiss Broadcasting organisation, who succeeds Vice-Admiral Sir Charles Carpendale as President of the International Broadcasting Union. Sir Charles had held the position for ten years.

At last week's annual meeting thanks were expressed to Sir Charles "for his high authority, his invariable courtesy, his breadth and high standards of outlook, to which the Union largely owes its present position as an institution of power, prestige, and utility."

The four new Vice-Presidents are French, German, Polish, and Swedish respectively.

A Medal of Honour

THE Medal of Honour for 1935 of the Institute of Radio Engineers, New York, has been awarded to Dr. Balth van der Pol, head of the radio research department of Philips' Laboratories, for his fundamental studies in the field of circuit theory and electro-magnetic wave propagation phenomena.

Hotel Radio

RADIO is a necessity in hotels catering for tourists, and, using this argument, Italian hotel owners have persuaded the broadcasting authorities to reduce the hotel radio tax.

Feeders for Short-wave Reception

Lead-in Connections for "Wave" Aerials

By J. H. REYNER, B.Sc., A.M.I.E.E.

FOR short-wave work, most transmitters nowadays use aerials of linear dimensions bearing some definite relationship to the wave-length emitted. The advantages of corresponding arrangements for reception are equally marked, and it is probable that "wave aerials," connected by means of feeder lines to the receiver, will come into general amateur use.

ONE of the main differences between ultra-short-wave reception and the ordinary broadcast technique is in the type of aerial employed. Normally the natural length of the aerial is small compared with the wavelength being received. When we deal with short waves, however, this is no longer true, while with the ultra-short waves used for television transmissions the ordinary type of aerial may be considerably longer than the wavelength in question.

This has an important bearing on the design of the system, and in order to appreciate the matter fully it is desirable to review briefly the operation of aerials in general. The essential point to remember is that an aerial is merely a special form of tuned circuit, containing inductance and capacity just like the coil-condenser combinations used in the receiver itself.

When a receiving circuit is tuned to the incoming signal the current which flows rushes backwards in an oscillatory manner. At one instant the energy is stored up in the form of a charge on the condenser. This then begins to discharge, the current gradually increasing until the discharge is complete. But the impetus acquired by the current is too great to allow it to cease abruptly, so that it continues to flow, charging the condenser in the opposite direction, after which the whole process reverses.

Now in a transmitting aerial our object is to make the electrons travel a long way in their oscillation from one condenser plate to the other, because they then produce an appreciable disturbance of the ether, generating what we call wireless waves. Since a good radiator of energy is also a good collector, similar considerations apply in the design of a receiving aerial.

We achieve our object by separating the plates of the condenser by a considerable distance—many feet instead of a fraction of an inch. Instead of actual plates we use a network of wires or even just a horizontal top, but it is not long before we encounter a difficulty. We find that we can no longer regard the capacity and inductance as concentrated. The connecting wire possesses a certain self-inductance and capacity, and a point is ultimately reached where the wire itself provides all the necessary inductance and capacity to tune the aerial to the required wavelength.

This occurs when the wire is equal in length to half the wavelength of the wave being received (or radiated), and a simple straight wire such as this is called a half-wave aerial. Alternatively, we can use an aerial one quarter of a wavelength long and earth the bottom end, when the ground provides an "image" as shown in Fig. 1 (c), so that an earthed quarter-wave aerial is equivalent to a "free" half-wave aerial.

For ordinary medium-wave reception, however, even a quarter wavelength is much too long—the aerial would have to be several hundred feet high—and in practice, therefore, we use a relatively short length of wire 60 to 100 feet long and "load" it up to the required wavelength by inserting a suitable inductance at the bottom end.

Under these conditions a length of ten or twenty feet between the aerial lead-in and the set is relatively unimportant. Similarly, we can tolerate a longish earth lead without serious ill effects. In fact, though it is not strictly accurate, we usually regard the aerial lead-in and the earth lead as mere connecting wires, not constituting part of the aerial system proper.

This convenient assumption, however, no longer holds good on short waves, and still less with ultra-short waves. Most readers will be familiar with the difficulties arising from a long earth lead on short-wave reception. Hand effects begin to intrude because the earth terminal of the set is no longer at earth potential owing to the distributed capacity and inductance of the earth wire. Points several feet apart are no longer at the same potential, even though they may be joined by a stout lead far thicker than any normal connecting wire.

To make this point quite clear, let us consider a half-wave aerial, oscillating naturally at the frequency determined by its own self-inductance and capacity.

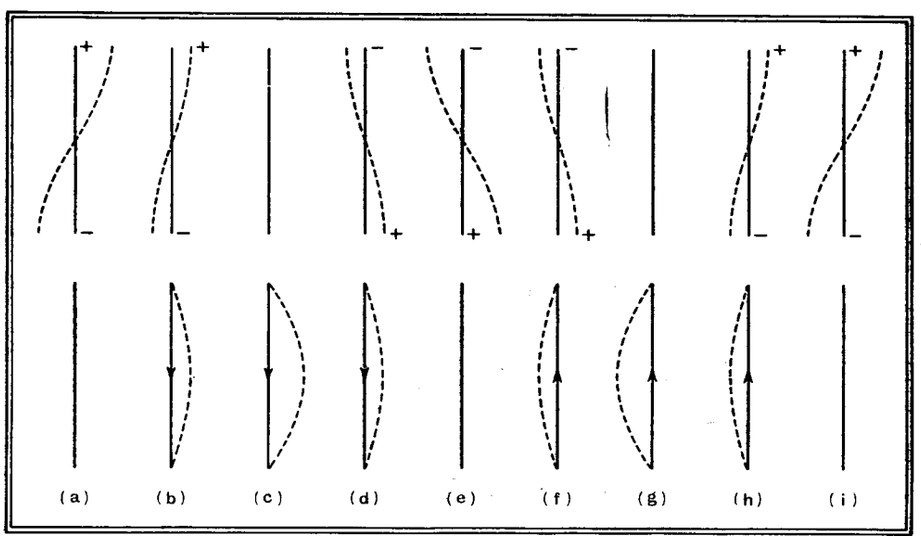

Fig. 2.—Voltage and current distribution on oscillating dipole aerial at successive instants. (a) Aerial charged, no current ; (b) partial discharge ; (c) fully discharged, max. current ; (d) current collapsing charges aerial in opposite direction ; (e) full reverse charge, no current ; (f) start of reverse discharge ; (g) full reverse discharge ; (h) aerial charging in opposite direction again ; (i) full original charge, no current.

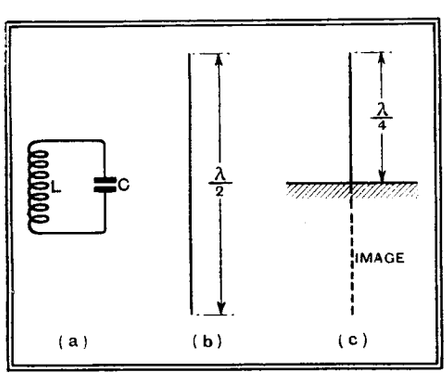

Fig. 1.—A straight wire possesses inductance and capacity, so that it will oscillate at a natural frequency of its own. If one end is earthed it behaves like a wire of twice the length, due to the image in the earth.

Feeders for Short-wave Reception—

Fig. 2 illustrates the distribution of current and voltage at several successive instants. We start with the aerial charged. The capacity, however, is not concentrated, but is distributed throughout the length of the wire. Hence the charge is not located at any particular points, but builds up gradually as we progress from the centre to the outer ends, giving a variation of voltage as shown in the first diagram.

When the aerial commences to discharge the voltage *at every point* begins to fall, so that we have a similar distribution of voltage along the wire but of smaller intensity, as indicated in the second diagram. Ultimately the aerial becomes completely discharged, with no potential anywhere, after which the charge begins to build up in the reverse direction.

Voltage Distribution

It is essential to appreciate the existence of this *space variation* of voltage along the length of the aerial, as well as the rhythmic variation of intensity from instant to instant. Each point in the aerial (except the dead centre) is oscillating in voltage, being alternately positive and negative, but the actual value of the oscillation becomes greater as we progress from the centre to the ends of the wire.

The current is also non-uniform. When the aerial starts to discharge the charges in the two opposite halves of the aerial change places. Those in the middle have only a little way to go, while those from the farther parts have to pass the middle on their way. Hence the current in the middle of the wire is much greater than at the ends, where there is obviously no current at all.

As before, the instantaneous value of the current is continually varying as the aerial charges and discharges, so that both the current and voltage are rapidly oscillating at every part of the aerial, but to a different extent. The distribution of voltage and current shown is obtained when the aerial is oscillating naturally or is exactly tuned to the incoming signal by being made nearly half a wavelength long—actually 0.47λ, which is a matter of ten or twelve feet with the ultra-short wavelengths just coming to the fore.

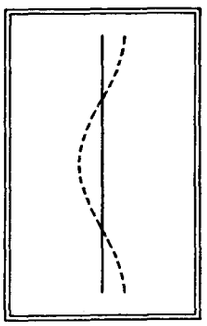

Fig. 3.—A full-wave aerial provides no greater voltage than the half-wave type.

Sometimes we make the aerial a little shorter, as we shall see, and tune it by including a suitable inductance at the centre or in some equivalent position, but this does not seriously affect the distribution of current and voltage, which remains of a generally similar character.

Now ultra-short waves suffer considerably from absorption by the earth and by buildings and similar obstructions. Hence it is desirable to keep the aerial clear of the ground by at least half a wavelength, and to erect it, as far as possible, in an open situation. To obtain the greatest signal strength we use the largest length possible —which is the half-wavelength arrangement just considered.

Beyond this we obtain no advantage. It will be clear from Fig. 2 that beyond half a wavelength the voltage on the aerial will begin to decrease again. In fact, an aerial a wavelength long would merely consist of two half-wavelength sections end to end as indicated in Fig. 3. The maximum value of the voltage and current is no greater than with the half-wave aerial. The only remedy is to use a "tiered" aerial consisting of a number of half-wave sections joined together by phasing coils, but these are beyond the scope of the present article, and are in any case unnecessary for ordinary purposes.

We will assume therefore that we have a half-wave aerial suitably located. We now have to transfer the energy picked up by the aerial to the receiver. Unless we build the receiver round the aerial itself—a possible but not always convenient arrangement—we must employ some connecting leads between the two, and here we pause to think.

For the connecting wires themselves will also be of a length comparable with the wavelength being received. In fact, they may be even longer, and numerous unpleasant possibilities present themselves. The leads may act as aerials themselves, either individually or in conjunction with the aerial proper, and the currents and voltages induced in the various parts may be mutually destructive.

If we are to be successful, therefore, we must arrange the *feeders,* as they are called, so that they only transfer the voltage picked up on the aerial, and do not add anything themselves. They are, in fact, radio-frequency transmission lines, and have been developed to a fine art in recent years, as is exemplified by the large-scale arrays used in the beam transmitters where fifty to one hundred aerials are fed simultaneously in the same phase, each through its own feeder!

Our present problem is not so complex, but a clear understanding of feeders will prove of considerable value to the experimenter, particularly in the new field of television.

The literature on the subject of feeders is apt to be confusing. There is much talk of tuned and untuned types, reflection, characteristic impedance, and so forth, often accompanied by copious mathematics. Fortunately, however, the operation of a feeder is fairly simple if one regards it from a physical point of view.

Suppose we consider two parallel wires as shown in Fig. 4 (a). There will be a capacity between the wires, and the wires themselves will possess inductance. Both these quantities are distributed over the whole length of the wire. Let us, therefor, for convenience, split up our feeder into a series of small sections in each of which we consider the inductance and capacity to be concentrated at a certain point. Our feeder then looks like Fig. 4 (b.)

Suppose we have a voltage applied across the input of the feeder. Current will commence to flow into the first condenser at a rate determined by the inductance and capacity. As this condenser charges up it will, in turn, begin to force current through the second section charging up the condenser C2. This, in turn, will charge the next section, and in this way, with a slight time lag, voltage will be transferred down the line.

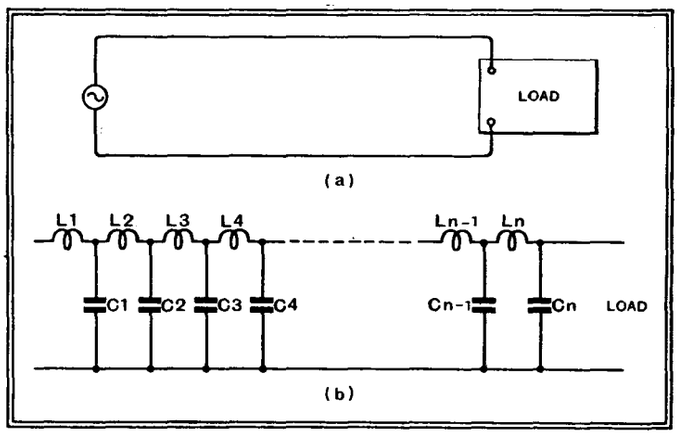

Fig. 4.—A feeder can be represented by a network of series inductances and parallel capacities.

Avoiding Reflection

Let us now turn our attention to the far end. Several things may happen here. Let us suppose that the far end is open. The last section of the feeder has charged up, and will continue to charge up because energy is still being fed in from the line. A point is soon reached, however, at which the voltage on this end section becomes greater than that on the preceding section. Under these conditions it will no longer accept energy from the line. Instead it will proceed to send current back again where it will ultimately reach the transmitting end. There, according to the conditions, it may be either absorbed or it may build up and start to return.

This return of energy from the ends of the line is known as reflection. A similar effect occurs if the line is short-circuited at the far end, and, in fact, there is only one condition under which no reflection can occur. The impedance at the end of the line must be such as to accept energy *at precisely the rate at which it is arriving.*

Suppose the line terminates in a resistance. This will discharge the end section condenser at a rate depending on the relative values of resistance and capacity.

Feeders for Short-wave Reception—

If the resistance is so chosen that it discharges the condenser just as fast as it charges up and no faster, there is no surplus energy at the receiving end and no reflection. Practically the whole of the energy sent out from the transmitting end is safely received and dissipated in the load at the distant end. The only loss occurs due to the resistance and leakage of the line, and this is usually small.

Matching the Line

In practice we do not use a resistance for the load but a tuned circuit. This behaves like a resistance of value L/CR, when tuned, and by adjusting the values we can make this equivalent to the critical non-reflecting termination required. Usually, of course, this is done by tapping down the coil or using a transformer, because the critical or characteristic impedance of the usual transmission line is quite low—a few hundred ohms.

If we match both input and output in this manner we then obtain a rigid link between the sending and receiving ends (the aerial and the receiver in our case) which has the following important advantages:—

(1) Neglecting losses, the voltage and current at the sending and receiving ends are the same, as in fact they are all down the line. The arrangement behaves as if we had the receiver actually in the aerial circuit.

(2) If the feeder is symmetrically arranged any voltage picked up on one wire is cancelled out by an equal and opposite voltage in the other.

(3) The operation is *not affected by the length of the feeder*. We can make it two feet or fifty yards. Except for a slightly greater loss in the latter case the results would be identical.

(4) The feeder does not carry the full oscillating current, so that absorption losses due to the proximity of buildings, etc., are minimised.

All these desirable features arise from a correct matching of the terminal impedances to the line. It therefore becomes of importance to know what this critical impedance is. We find that it depends entirely on the dimensions of the feeder itself. At radio-frequencies the resistance of the wire is negligible in comparison with the inductance, and the leakage is negligible in comparison with the capacitance, which gives us quite a simple expression for the critical or characteristic impedance, as it is called. It is simply $Z = \sqrt{L/C}$, which has the dimensions of a pure resistance. L and C are the inductance and capacity for a given length of feeder—it is immaterial what the length is.

Both these quantities depend upon the radius of the wire used for the feeders and the spacing between them. There are two types of feeder in common use, one the parallel-wire arrangement with the wires anything from a few inches to a few feet apart depending upon circumstances, and the other concentric feeder in the form of a hollow tube, which forms one connection, with a concentric wire running down the centre.

We find that quite large variations of the mechanical dimensions have only a small effect on the result. The actual formulæ for the two types of feeder are given at the end of this article, but roughly the parallel-wire feeder has a characteristic impedance in the neighbourhood of 600 ohms, and the concentric type has an impedance of about 80 ohms.

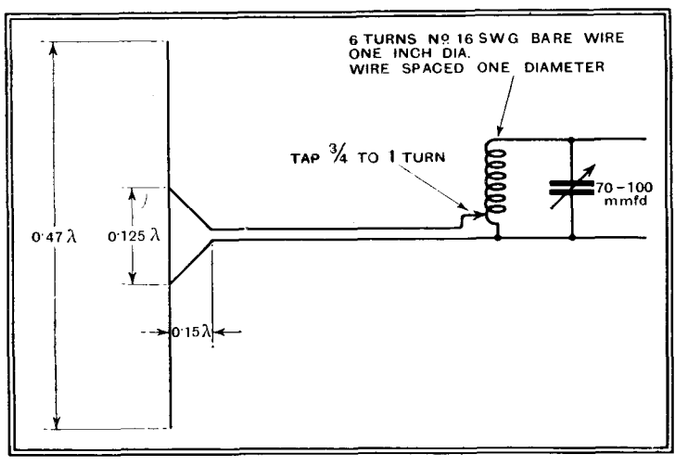

Fig. 5.—Half-wave aerial with untuned feeder; very good for fixed wavelength reception. The aerial should be at least half a wavelength above earth.

Let us examine one or two ways in which this type of feeder may be applied to ultra-short-wave reception.

Fig. 5 illustrates the application of the idea to a simple half-wave aerial. The wire should be just under half a wavelength in length, and for a parallel-wire feeder the tapping points should be 0.125λ apart, as shown, in order to obtain the necessary 600 ohms impedance.

At the receiving end the feeder will be tapped part way up the coil. A typical 7-metre coil of the type shown in Fig. 5 has a magnification ($L\omega/R$) of about 130. The inductance will be about 1 microhenry and the HF resistance about 2 ohms, so that the dynamic resistance of the circuit ($L^2\omega^2/R$) is about 36,000 ohms. Thus the correct tap for 600 ohms is just under one turn from the earth end.

Incidentally, do not use tinned copper wire for coils or feeders as the tin covering, which carries practically all the current at the very high frequencies involved (40 to 50 megacycles), has a much larger resistance than the copper undereneath it. The best material is polished copper which has been lightly lacquered.

This form of aerial is most efficient for reception on a fixed wavelength, but the effectiveness falls off rapidly as the wavelength is changed. The aerial matching is not critical. A variation of two or three inches either way is permissible, but on the receiving circuit at the far end the adjustment is critical to a fraction of a turn. As already explained, the length of the feeder is unimportant.

An essential feature of the non-resonant feeder is that the current is constant throughout the length. In fact this forms one of the simplest methods of checking and even adjusting the matching.

If we depart appreciably from the matched condition serious reflection is obtained. Voltage travels down the line from the receiving end to meet the voltages already being transmitted in a forward direction, and there will clearly be interference between them. The energy fed into the line is simply frittered away. If, however, the length of an open-circuited feeder happens to be an even number of half-wavelengths, then the time taken by the forward and reverse waves in their travel is such that they are not mutually destructive, but add together to form a series of *standing waves*.

The Resonant Feeder

Fig. 6 illustrates such an arrangement. The voltage at the far end of the line, which is open-circuited, is naturally a maximum, as it is also at the transmitting end. In between the two we have a succession of maxima and minima. Similar standing current waves will be obtained, the current maxima taking place at the points where the voltage is zero, very similar to the distribution in a simple half-wave aerial. This variation of current and voltage along the feeder is the essential characteristic of the resonant feeder and distinguishes it from the untuned type.

A similar arrangement can be obtained with a short-circuited feeder, but in this case it has to be an odd number of quarter-wavelengths long, i.e., one-quarter of a wavelength more or less than for the example just considered.

Now a tuned feeder of this type can be used for connecting a short-wave aerial to the receiver, particularly where the run is short. Moreover, this form of feeder is useful where a range of wavelengths is to be covered. The feeder, of course, must terminate in a current node at the receiving end, while at the aerial end it must finish either in a voltage or a current node according to the connection to the aerial.

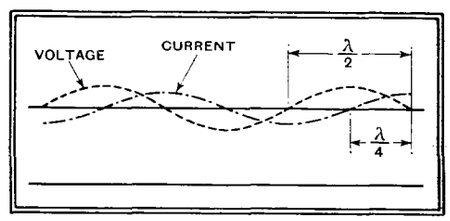

Fig. 6.—An open feeder develops standing waves of current and voltage as shown here if the length is critically adjusted.

Fig. 7 shows two possible arrangements. In the first the feeder has a cur-

Feeders for Short-wave Reception—

rent node at the aerial end so that the feeder must be an integral number of half-wavelengths long. The end is joined to the current node of the aerial itself so that the feeder acts as a continuation of the aerial. The standing waves on the wire are such that the current and voltage in the aerial itself are exactly the same as if the feeder was not there.

It is also worth noting that the currents in the two feeder wires are in equal and opposite directions at any point, which means that the feeder is non-radiating and is also non-responsive to passing wireless waves. All the pick-up is on the aerial. The length of the aerial is made to correspond with the mean wavelength being received which allows a latitude for receiving signals over quite a wide range.

Tuned feeders should not be bent at sharp angles if this can be avoided. For this reason the Fig. 7(b) circuit may sometimes be found better. Here the feeder is arranged with a voltage node at the aerial end which is connected to the high voltage end of the aerial itself. The other feeder terminates in mid-air, its function being to maintain the correct voltage and current relations in the feeder itself, and also to render the feeder non-radiating and non-absorbing. Incidentally, this form of feeder is often referred to as a "Zepp" aerial.

It is not always convenient to adjust the length of the feeder exactly to the value required, while some coupling device is necessary at the receiving end. Hence it is usual to include a coil with two tuning condensers, one in each lead, as indicated in the figure. The secondary circuit is tuned accurately to the wavelength being received, and the two aerial condensers are then adjusted for maximum signal strength. The coil and condensers act as an extra half-wavelength section.

The length of the feeder must still be approximately correct, but the presence of the tuning condensers allows small differences to be compensated. In fact, the whole system can be used to cover a range of wavelengths above or below the mean value for which the aerial has been designed, and this is a useful property.

If we are receiving a wavelength a little longer than the mean value the current nodes do not occur exactly at the junction of the aerial and the feeder, but a short way along the feeder. The tuning condensers at the receiving end are thus made larger than normal, giving the equivalent of more than a half-wave section in order to obtain the correct current node in the coupling coil. Conversely with a shorter wavelength the condensers are made smaller than usual.

The adjustment is, of course, automatically brought about by tuning to maximum signal strength in each case. The inductance of the coupling coil is made roughly equal to that of a half-wavelength section of feeder. If d/r is 100 (see Appendix) the inductance of a $3\frac{1}{2}$-metre length of feeder is 6.5 microhenrys which could be obtained with 18 turns on a 1in. former 1in. long.

Similarly the capacity for the same feeder would be 21.2 micro microfarads so that each of the tuning condensers should be about 70 micro microfarads to give a comfortable tuning range.

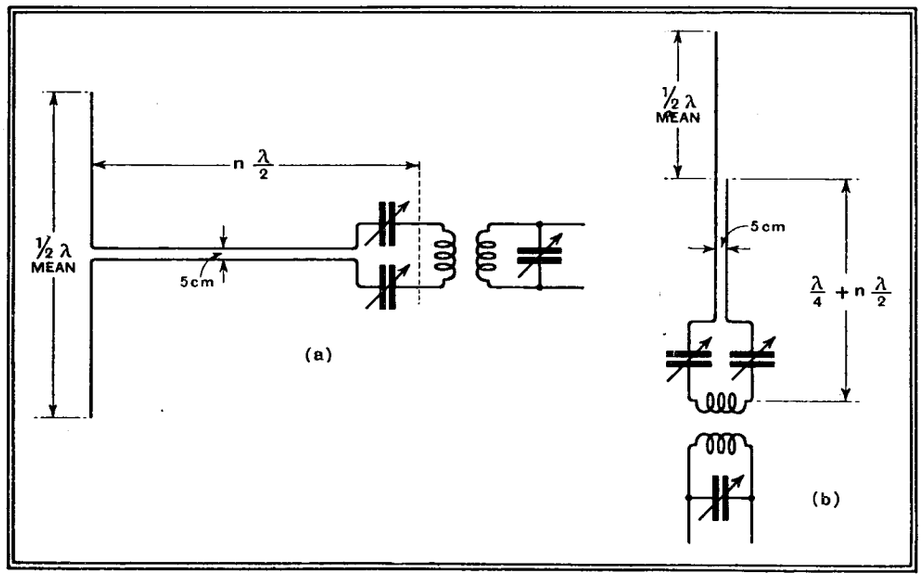

Fig. 7.—A tuned feeder with half-wave aerial as at (a) is an arrangement covering a wide range of wavelengths. Diagram (b) shows an alternative form of tuned feeder known as a Zepp aerial.

Conclusion

We may sum up the situation therefore as follows. The tuned feeder requires no impedance matching, but must be reasonably adjusted as to length. When used with a half-wave aerial it gives a flexible arrangement which can be used to cover a range of wavelength by adjustment of the tune of the end section. It is not suitable for long runs because it is carrying the full oscillating current, and consequently the losses are appreciably heavier than with the untuned type. In fact, it is important to keep the run of the feeder as free as possible from obstructions to minimise the induced currents and consequent losses.

The untuned feeder requires critical matching, which is best checked by measuring or estimating the current at various points and adjusting the matching until this is constant over the whole length. Once this has been done the length is unimportant, and the feeder losses are much smaller than with the tuned type. It is, however, only practicable with a fixed wavelength aerial.

It would seem therefore that the untuned feeder, although the more satisfactory considered as a pure transmission line, is more likely to be used for commercial equipment, leaving the tuned feeder with its somewhat simpler adjustment to the amateur.

APPENDIX

Inductance per cm. of two parallel wires

$$= 9.2 \times 10^{-3} \log_{10}\frac{d}{r} \text{ microhenrys}$$

Capacity per cm. between two parallel wires

$$= \frac{1}{8.28 \log_{10}\frac{d}{r}} \text{ micromicrofarads}$$

Characteristic impedance of parallel wire feeder

$$276 \log_{10}\frac{d}{r} \text{ ohms}$$

In all the above, r is the radius of the wires in cm., and d is the spacing between them also in cm. For $d/r = 100$, $L = 18.4 \times 10^{-3}\mu H$, $C = 0.0605\ \mu\mu F$ and $R = 552$ ohms.

For a concentric feeder the characteristic impedance is given by $R = 138 \log_{10}\frac{r2}{r1}$ where $r1$ is the radius of the centre conductor and $r2$ is the inside radius of the outer tube.

THE RADIO INDUSTRY

ELECTRADIX RADIOS, 218, Upper Thames Street, London, E.C.4, has just issued a 12-page sale list of scientific and radio apparatus. It is described as an appendix to the 72-page catalogue (which costs 4d.), and includes many items that will interest the home constructor and experimenter.

The same firm has also issued a leaflet describing heavy-duty Slider Resistances between 15 and 300 watts, both of the protected and open types.

Brown Brothers, Ltd., the well-known wholesale distributors, are opening new branches at Eastbourne and Carlisle early this month.

Change of address: Baldwin Instrument Co. to "Brooklands," Dartford, Kent. Telephone: Dartford 989.

Car-radio in Paris taxis is apparently a success; more than 5,000 cabs have already been equipped, and a further large number are shortly to be fitted with Philips "Motoradio" sets.

Mr. D. Gerard Wakeham has recently been appointed as the sole agent for the Fuller Accumulator Co. in Scotland. His office address is 93, Hope Street, Glasgow, C.1. Telephone: Central 872.

Advance particulars are now available regarding a new series of ambitious all-wave sets produced by Halford Distributors, Ltd., 39, Sackville Street, Piccadilly, London, W.1.

Mr. G. Mayle, managing director of Universal Importers, Ltd., 24, Fitzroy Square, London, W.1, has recently left for the United States, where he will spend some time at the Ferguson factory preparing new models of Ferguson radio receivers for the forthcoming season.

BROADCAST BREVITIES

BY OUR SPECIAL CORRESPONDENT

Recording Over 250-mile Land Line

A RARE feat of recording has been carried out in connection with Laurence Gilliam's "Cable Ship" programme on July 10th.

The cable ship "Mirror" was lying in Plymouth Harbour, but the recording apparatus was lying at Broadcasting House. Instead of despatching Fletcher's Flying Squad (as they call the new Mobile Recording Unit) the officials decided to pick up sounds on the cable ship by land line.

Lamp Flex to the Mainland

"The results are amazing," a man told me who took an active part in the recording job. "Listening to the disc in London, one can hear the gentle lapping of the waves beside the boat, the screech of the gulls and even the distant chime of a church clock.

"The boat itself was 300 yards from land. We used ordinary flex—not even rubber-sleeved—to connect the microphones with the Post Office line terminal point on the sea front. Some of the time the flex was trailing in the water."

A Veteran Speaks

Any listener will be able to confirm the truth of my friend's verdict on the recording by tuning in "Cable Ship" on Wednesday next. Captain N. J. C. Lawson, who was in command of a cable ship for thirty years, contributes to the programme.

Tribute to Empire Broadcast

CAPT. A. P. THORN, of East Griqualand, South Africa, has written to the Lord Mayor of Liverpool saying that the cheers which rounded off the Empire station broadcast of Liverpool's recent "Silver Trumpets" Jubilee Pageant nearly broke his loud speaker.

Letters have poured in from listeners all over the world expressing delight at the clarity of reception.

"Trip" to Liverpool

A listener sitting in a lounge at Nakuru, Kenya Colony, 4,000 miles away, wrote: "So clear was everything, even the commands to the King's 'Liverpool' Regiment, that for that half-hour we were at home ourselves with our relations and friends in Liverpool."

A former Liverpool municipal official enclosed a cheque for five guineas for one of Liverpool's charities. He was in a lonely spot in Rhodesia, twenty miles from the nearest village, and "thoroughly enjoyed his trip to his native city."

American Visitor

WHEN Mr. Cecil Graves, Mr. John Watt and Uncle Tom Cobley and all go to America for radio ideas it is refreshing to meet an American over here with the same object in view. Mr. John F. Royal, who is virtually Cecil Graves's opposite number in America (he is Vice-President of the N.B.C. programmes), is now in Europe seeking new ideas in France, Germany, Russia, England, Sweden, Denmark, Austria, Switzerland and Poland.

AT OXFORD. Sir Herbert Samuel and Sir John Reith "snapped" at the University last week after each had received the degree of Doctor of Civil Law.

Mr. Royal wants to expand American programmes, "particularly along the lines of cultural, ethical and academic broadcasts."

Ribbon "Mikes" for the Provinces

THE provincial stations appear to have been a little hurt at the Headquarters decision not to supply them with the new ribbon microphones, the inference being that these delicate gadgets call for too much skill in managing the pre-amplifiers.

I now hear that the provinces may soon be given ribbon mikes in consequence of some important simplifications in their design. Improvements in lines connecting the microphones with the A amplifiers in the control room make it possible to dispense entirely with pre-amplifiers.

Lost Music

I WONDER how many tons of original music MSS. are buried in the B.B.C. archives, never to be used again?

Almost every week one reads that the music for a particular production has been "specially composed by So-and-So." Sometimes, perhaps, the music is best buried as deeply as possible, but very often it is a case of "gems of purest ray serene" lost for ever in those dark, unfathomed caves of Portland Place.

In Passing

IF the B.B.C. acted upon a request received last week from a certain Australian listener, Handel's "Largo" and other slow movements would never be heard again.

"Quick step music seems to be the best here," says our Australian, "because it has no time to fade."

Dancing and Demolition

HENRY HALL has been "in the wars" lately. First he fell 20 feet in the Elstree film studios, and now, although keeping a stiff upper lip, is battling against an ever-encroaching army of picks and shovels. The scene is the veteran "No. 10" studio, Waterloo Bridge—only "Waterloo Bridge" will soon be a meaningless address.

Interference

The work of demolition is proceeding rapidly, and in the daytime the noises already penetrate to "No. 10." This is of little consequence during rehearsals, but cannot, of course, be tolerated during broadcasts.

HENRY HALL is still unperturbed by the demolition work on Waterloo Bridge, next to "No. 10" studio.

Ejection Order ?

Before very much more water has flowed under where the bridge was the B.B.C. Dance Band will have to go—probably to Maida Vale, though the new studio may not be ready in time. For some mysterious reason the Band declines to play in Broadcasting House, so it may have to find a temporary abode in an upper room near Oxford Circus or in Bond Street.

Why not a Hyde Park bandstand?

A Badger in the Studio

AN original contribution to the Saturday sports talks will be given by Walter Bury on July 13th.

Mr. Bury has the uncommon job of badging racehorses. It is one of the rules of the Jockey Club that all stable lads in charge of racehorses just wear a specially numbered armlet as they lead their horses round the parade ring before a race; and it is Mr. Bury's responsibility to see that the numbers on the lads' arms correspond correctly with the numbers of their horses as printed on the racecards.

Behind the Scenes

Mr. Bury, whose work takes him "behind the scenes," has much of interest to tell listeners about little-known aspects of horse-racing. He will speak of "Tattersall's Talk," for example, which is the language talked by stable lads among themselves, and is as vivid—and as incomprehensible to most people—as thieves' slang.

Mr. Bury says: "My job of badging horses may be a small one in its way, but I don't think you could call it a slow one, by any stretch of imagination."

★ ★ Listeners' Guide fo

Outstanding Broadcasts

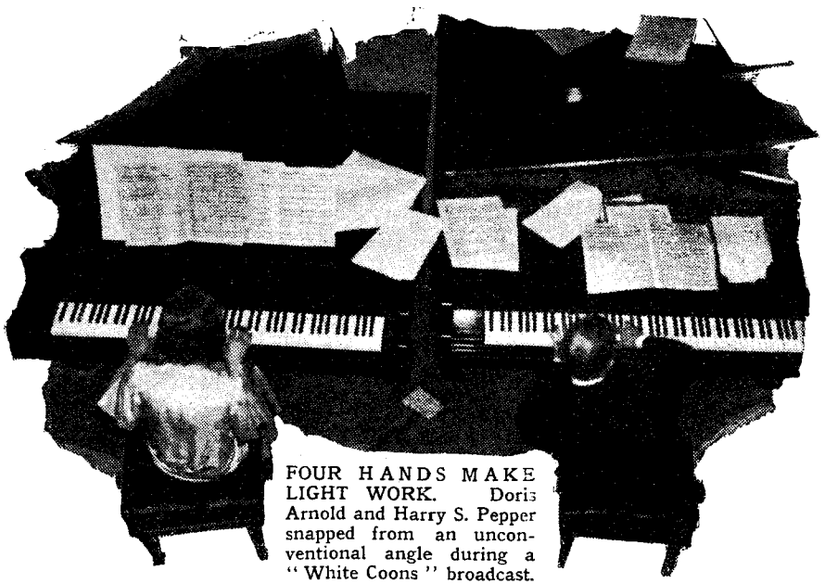

FOUR HANDS MAKE LIGHT WORK. Doris Arnold and Harry S. Pepper snapped from an unconventional angle during a "White Coons" broadcast.

MAINTAINING THE STANDARD

THE fears (or hopes?) of the pessimists are not being realised, for the B.B.C. programmes show unexpected vitality for the time of year, despite the fact that several popular features, including "In Town To-night" and "Soft Lights and Sweet Music," have been temporarily suspended. Perhaps the Corporation is anxious to prove that, no matter what television may have in store, the sound programmes can afford the maximum amount of entertainment.

◇ ◇ ◇

FOUR HUNDRED YEARS AGO

SIR THOMAS MORE, recently canonised by the Pope, is the subject of a radio impression to-morrow evening (Saturday), which is being produced by Laurence Gilliam from the book by D. G. Bridson. It was in 1535, on July 6th, that Sir Thomas More, ex-Lord Chancellor of England, was beheaded on the warrant of Henry VIII.

The framework of to-morrow's drama is based on three episodes: the Trial, a dream during which cameos of Sir Thomas More's life are given, and the Execution, followed by an epilogue.

An imposing cast includes Lewis Casson, Carleton Hobbs, Harcourt Williams, Philip Wade, and Gladys Young.

FIREWORK MUSIC

HANDEL'S "Royal Fireworks" music, which opens the concert of the London Symphony Orchestra, conducted by Sir Hamilton Harty, on Sunday evening, has a strange history.

It was intended to accompany a firework display in the Green Park, London, to celebrate the peace of Aix-la-Chappelle. A great wooden structure was erected with a symbolic figure representing the King in the act of handing peace to Britannia herself. Unfortunately, the fireworks were a fiasco, and before the end of the evening the wooden erection was burnt down.

◇ ◇ ◇

A LOST CAUSE

THE Battle of Sedgemoor—the last fought on English soil—is the subject of a dramatic broadcast on Tuesday next, July 9th. It concerns the Duke of Monmouth's ill-fated attempt to seize the throne of England in 1685 and its culmination at Sedgemoor on July 6th of that year. The dramatisation has been written and will be produced by Felix Felton.

The Duke of Monmouth is generally considered to have been ill-advised by local hot-heads, who persuaded him, with 2,000 yokels armed with pikes and scythes, to engage in combat with the regular forces of the Crown. When the battle was lost Monmouth left the field and was eventually captured in one of the nearby ditches. He was executed at the Tower of London by the notorious Jack Ketch.

In the B.B.C. production Robert Farquharson will play the part of James II and Percy Perrins that of the Earl of Sunderland, the King's favourite. Glen Byam Shaw appears as the Duke of Monmouth.

◇ ◇ ◇

ITALIAN POLICE BAND

EVEN in such frigid areas as Aberdeen and Inverness, police bands have a fire and verve denied to all others; what an Italian police band can achieve in this direction those of us who have not already heard one will discover on Tuesday next, July 9th, when the B.B.C. will relay a concert by the Banda del Corpi Agenti di Pubblica Sicurezzi. This will come direct from Turin.

THE SEARCH GOES ON

FORTUNATELY, from an entertainment point of view, Tiger Standish was not successful in his quest for the criminals in the Montmartre café last week, so the "Mystery of the Seven Cafés" will be carried a stage farther in the Regional programme at 8.45 on Tuesday next, when we all land at the Café Astoria, Warsaw. Walford Hyden and his orchestra will be there, and we shall run up against Selma Vaz Dias, Bruce Belfrage, and Dmitri Vetter.

This serial is turning out a real success, so let us implore Norman Shelley not to catch his man at Warsaw.

◇ ◇ ◇

SINGERS OF THE PAST

COMPARISONS will not be odious in the interesting gramophone programme which Mr. P. G. Hurst is presenting on the Regional wavelengths on Wednesday next. He is reviving memories of such great operatic prima donnas as Patti, Tetrazzini, and Jenny Lind in Rossini's "Barber of Seville." In the "music lesson" scene of this opera it has become traditional for the soprano in the rôle of Rosina to sing an aria of her own selection, rather than that written by Rossini. Mr. Hurst's programme will include the favourite "music lesson" songs of these great singers of the past.

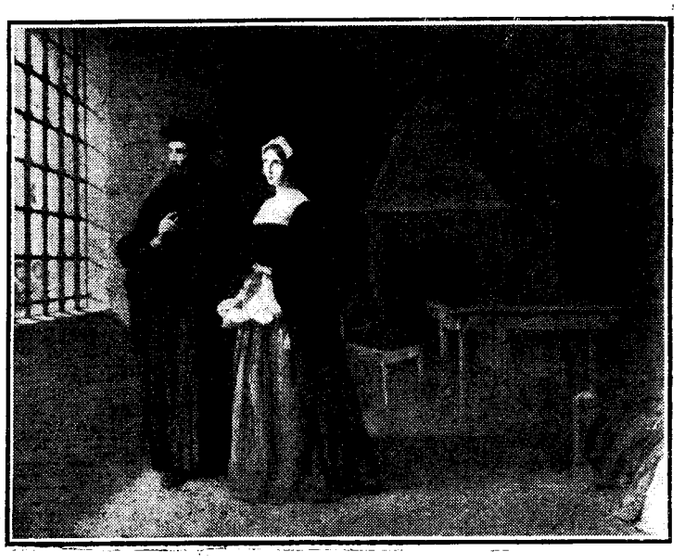

SIR THOMAS MORE. J. R. Herbert's well-known painting showing Sir Thomas More with his daughter, Margaret, in the Tower of London a few moments before he was taken out for execution. This episode will be enacted in the B.B.C.'s commemorative programme to-morrow evening.

r the Week

t Home and Abroad

"HASSAN"

"HASSAN," by James Elroy Flecker, is to be broadcast for the fourth time on Thursday next, July 11th. The first broadcast, in 1925, followed its great success at "His Majesty's." In the coming broadcast Henry Ainley will again play the part of Hassan, the bazaar confectioner. The cast includes Carol Goodner, Gwendolen Evans, Malcolm Keen, Leon Quartermaine, and Ion Swinley. It is interesting to note that W. H. Flecker, the father of the author, plays the part of the Master of the Caravan.

Photo. Curling Studios.

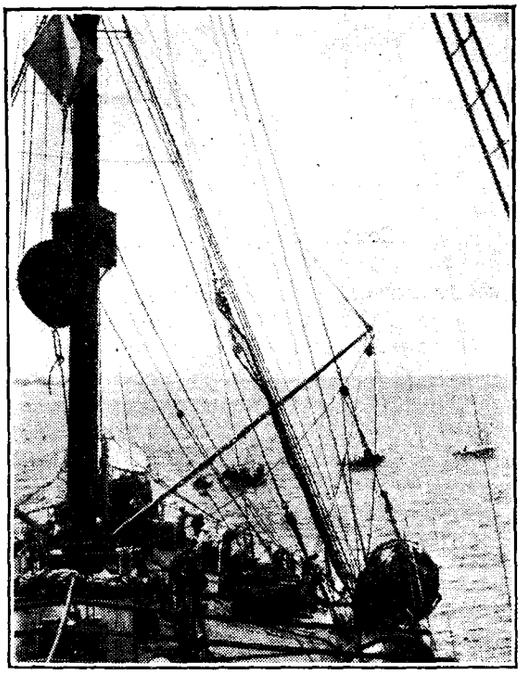

"CABLE SHIP" is the title of Laurence Gilliam's feature programme on Wednesday next, dealing with the work of the ocean "breakdown gang." The above picture was taken on a Cable and Wireless vessel during the placing of a marked buoy in the tropics.

MANY ORCHESTRAS

ORCHESTRAL concerts again offer an embarrassing choice during the next few days. On Sunday the Brussels No. I Symphony Orchestra will give a concert at 8 p.m. under the direction of Professor Marsick; the following evening, at 9 p.m., the Warsaw Radio Symphony Orchestra will be heard, the solo pianist being Sztompka.

The French National Orchestra and the Felix Raugel Choirs will be conducted by Inghelbrecht and de la Presle in a concert from the Salle Gaveau, to be broadcast by Paris P.T.T. at 8.30 on Tuesday.

Orchestral music from the Brussels Exhibition will be given at 8 p.m. on Monday by Brussels No. II, and at the same time on Wednesday and Thursday by Brussels No. I.

"SEDGEMOOR." The last battle fought on English soil—250 years ago—is the subject of a special broadcast on Tuesday. Our photograph shows the stone on Sedgemoor field commemorating those who fell and others who suffered transportation "pro patria."

30-LINE TELEVISION

Baird Process Transmissions. Vision, 261.1 m.; Sound, 296.6 m.

MONDAY, JULY 8th.
11.15–12.0 p.m.

Indefatigable Charley, the Gay Viennese; Freddy Mittop, the newest Spanish dancer; Janet Joye, impersonator; Sydney Jerome's Quintet.

WEDNESDAY, JULY 10th.
11.0–11.45 p.m.

Ballet Carnival, arranged by Lydia Sokolova, directed by Eustace Robb. Music by Schumann. Lydia Sokolova, Columbine; Idzikovsky, Harlequin; Algeranoff, Pantalon; Diana Gardiner, Papillon.

STRAUSS OPERA

THE first performance of a Richard Strauss opera is a notable event, and its first broadcast scarcely less so. On Monday evening at 7 p.m. Leipzig is relaying from the State Opera House, Dresden, Ben Jonson's three-act comic opera, "The Silent Woman," with music by Richard Strauss. This was first performed in June, but has not yet been broadcast.

TITLES

THE German broadcast programme directors have a genius for apt titles. Here are three for the coming week:—"Come Back—You Are Forgiven," a radio cabaret from Berlin and Stuttgart on Tuesday at 9 p.m.; "A Love Story with Difficulties," a special dance programme by the Munich Radio Dance Orchestra on Wednesday at 8.45 p.m.; and "Fishing in the Ether," another Munich programme to be relayed by Frankfurt and Deutschlandsender at 8.10 on Thursday.

This last is described as a musical investigation into the curious geography of the variable condenser.

FAIRY TALE OPERA

ONE of the operatic gems of the coming week's programmes will be Lortzing's "Undine," to be broadcast in the early hours of Sunday (12.30 to 2 a.m.) by Stuttgart and Frankfurt. This opera is based on a fairy tale and is singularly tuneful. THE AUDITOR.

HIGHLIGHTS OF THE WEEK

FRIDAY, JULY 5th.

Nat., 8.45, "Round the Bandstand," by Max Kester. 10, Recital by Kathleen Moorhouse (violincello) and Frank Merrick (pianoforte). 11, Harry Roy.

Reg., 8, New Georgian Trio. 8.30, Opera: "The Love for Three Oranges," by Serge Prokofiev.

Abroad.

Toulouse, 9, Opera: "Le Grand Mogol" (Audran).

SATURDAY, JULY 6th.

Nat., Turner Layton in Songs at the Piano. ¶"Sir Thomas More." ¶B.B.C. Theatre Orchestra.

Reg., "Music Hall." ¶B.B.C. Orchestra (G.), with Eileen Joyce (pianoforte).

Abroad.

Hamburg, 8.10, Open-air concert from Hamburg, Bremen, Hanover, Kiel and Stettin.

SUNDAY, JULY 7th.

Nat., Violin Recital by Bratza. ¶Eugene Pini and his Tango Orchestra. ¶Leslie Jeffries and the Grand Hotel, Eastbourne, Orchestra.

Reg., B.B.C. Military Band. ¶Ballad Concert: Megan Thomas (soprano); Norman Allin (bass). ¶"First Hate," story by Algernon Blackwood. 9.20, London Symphony Orchestra, conducted by Sir Hamilton Harty.

Abroad.

Kalundborg, 8, Opera Music by the Radio Orchestra.

MONDAY, JULY 8th.

Nat., Commodore Grand Orchestra. ¶Regimental Marches by the B.B.C. Military Band. Will C. Pepper's "White Coons." ¶Virtuoso String Quartet

Reg., Opera Bouffe, by the B.B.C. Midland Orchestra. ¶Brahms concert by the B.B.C. Singers

Abroad.

Brussels, II, 8, Orchestral concert from the Exhibition.

TUESDAY, JULY 9th.

Nat., Henry Hall and B.B.C. Dance Orchestra. 8, "The Battle of Sedgemoor." ¶Italian Police Band.

Reg., New Georgian Trio. 8.45, The Mystery of the Seven Cafés. ¶Pianoforte Recital by Donald F. Tovey.

Abroad.

Athlone, 7.15, Handel Commemoration Concert.

WEDNESDAY, JULY 10th.

Nat., 8, "Cable Ship." ¶Handel Concert by soloists B.B.C. Singers and Boyd Neel String Orchestra. ¶"Terpsichore," a ballet for singing and dancing by Julian Herbage.

Reg., Reginald King and His Orchestra. ¶"The White Coons."

Abroad.

Leipzig, 8.45, Serenades relayed from the famous Dresden Zwinger.

THURSDAY, JULY 11th.

Nat., Walford Hyden Magyar Orchestra. ¶B.B.C. Military Band. ¶Ramsay's Rhythm Symphony.

Reg., Herbert Howell's concert: Dorothy Webb (contralto); Herbert Howell's (pianoforte). 8.30, "Hassan."

Abroad.

Kalundborg, 10.45, "China and Japan in Music," by the Radio Orchestra.

Design of Output Chokes

The Effect of Introducing an Air Gap

(Concluded from p. 643, June 28th issue.)

IN the first part of this article it was shown how a large undirectional magnetising force due to a feed current through an iron-cored winding caused an appreciable reduction in the flux density variation due to an alternating component superposed on the steady flux. With any given choke the inductance depends directly upon the variation in flux density due to alternating potentials across its terminals. When the AC flux density is reduced by polarisation, so also is the inductance

IT has already been suggested that a short air gap in the magnetic core material would reduce the effect of polarisation materially, but the reduction in the alternating flux would be proportionately less. The effect of putting an air gap in a magnetic core can be illustrated quite nicely by a simple graphical process. In fact, owing to the peculiar shape of the magnetisation curve of any ferro-magnetic material, problems of this nature are to an extent outside the bounds of reasonable mathematical analysis, so one must rely on a graphical process sooner or later.

In Fig. 8 is shown the ordinary B-H curve for Radiometal. By assuming that the core metal of a choke is of the same cross-sectional area throughout, or that it is designed to give an equivalent uniform section as in the type of stamping shown in Fig. 13, the method used to obtain the effect of an air gap is simplified. We have also to assume that the magnetic flux across the air gap is in the gap alone and does not leak out at the edges.

This arrangement is shown schematically in Fig. 9. Suppose we have a certain value of B the steady flux density in the core, and let this be 4,000 lines per sq. cm., as at P on the curve, Fig. 8. Then the value of the magnetising force, which, in this case is due to direct current, to send the flux through the core is approximately 0.4 gauss as read off on the horizontal scale. If we put a very short

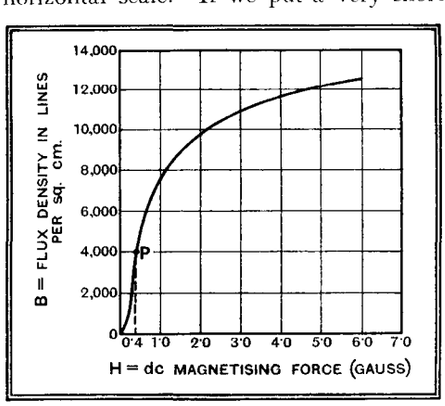

Fig. 8.—Direct-current magnetisation curve for Radiometal alloy.

air gap in the core and still desire to maintain the same value of magnetic flux it is necessary to increase the magnetising force due to the DC. This can be done by increasing either the current or the number of turns on the coil. In practice it is obviously more expedient to increase the current, since this is accomplished by merely reducing a rheostat in circuit. The problem we have to solve is this: if in a core of known dimensions and material having a winding of a certain number of turns we insert an air-gap of specified length, what is the additional value of

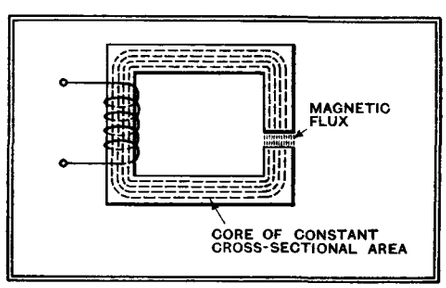

Fig. 9.—Schematic diagram of gapped core.

magnetising force H required to preserve the same flux density B.

Obviously, the additional value of H is that required to make the flux density in the air-gap equal to that in the metal prior to the introduction of the gap, i.e., B = 4,000 lines per sq. cm. Now, if l is the mean length of the core and lg is the length of the air gap, which is only a very small fraction of l, the product Hl is known as the magneto-motive force. It is equivalent to the electromotive force in an electrical circuit, and is responsible for sending the magnetic flux round the core. Just as from Ohm's law we have $E=RI$, so in the magnetic circuit m.m.f. = reluctance × flux or $F=S\phi$, where F = magneto-motive force, S = magnetic reluctance and ϕ = total magnetic flux in the core section, this being the product of the flux density B and the area A, i.e., $\phi=BA$ (the batchelor of arts formula).

The magneto-motive force necessary to give a flux density B in an air gap of length lg is Blg. But the m.m.f is also Hl, so we obtain the relationship $Blg = Hl$, or as it may also be written, $\frac{B}{H}=l/lg$. The physical interpretation of this formula is that the ratio of the flux density to the

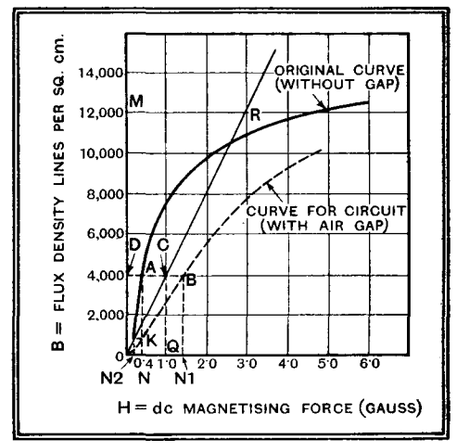

Fig. 10.—A series of curves, based on that of Fig. 8, showing the effect of introducing an air gap.

$$l/lg = \frac{OM}{MR} = \frac{OD}{DC} = 4{,}000/1.$$

magnetising force must be equal to the ratio of the length of the core to that of the air gap. The next step is to incorporate this in Fig. 8. If in Fig. 10 (where the curve of Fig. 8 is reproduced) we draw a line O R so that the ratio $OM/RM = l/lg$ then this is also B/H. Thus the value of H necessary to send a flux of 4,000 lines per sq. cm. through the air gap is DC = OQ. But the value of H to send this flux through the core is ON, so the total H is ON + OQ. Thus we set off CB equal to DA and DB = ON1 which is the requisite value of H. By applying this graphical method to other points on the B-H curve we get a combined curve shown dotted. This gives the relationship between H and the flux density it causes with an air gap in circuit.

Air Gap Added

The diagram of Fig. 10 is drawn with a ratio $l/lg = 4{,}000/1$, so that if the mean core length is 10 cm. the width of the air gap is only one thousandth of an inch. It is very clear, therefore, that a tiny gap can cause a profound effect on the magnetic property of the assembly. As in the first article, if we now take the ratio of B/H on the dotted curve, the effective permeability of the complete circuit, including the air gap, is obtained. By way of comparison the reader can easily plot the curves showing the permeability of the

Design of Output Chokes—

circuit with and without the air gap, from which the reduction, due to the gap, can be readily seen. By drawing a line OR in which MR has several times its present value the effect of increasing the air gap on the permeability can be found.

The preceding problem relating to the influence of an air-gap usually presents itself in a different way. We have a wound core and the current is fixed at a certain value. What is then the flux density in the core when an air gap of 1/1,000th in. is inserted? The magnetising force H is ON, so the flux density is KN, which means that the air gap has caused a reduction from AN to KN, i.e., about 5 to 1.

To find the magnetising force on the core alone, apart from the air gap, we project from K to the left, then the value ON_2 is that which is required. This, therefore, is the polarising magnetising force now acting on the core. The alternating magnetising force is superposed upon this when the core winding is used to carry the anode feed current of a valve. In Fig. 11 we draw a vertical line at H = 0.4, and the working permeability of the core is somewhere on this line. To find this point we have to know the AC magnetising force spent on the core. This necessitates

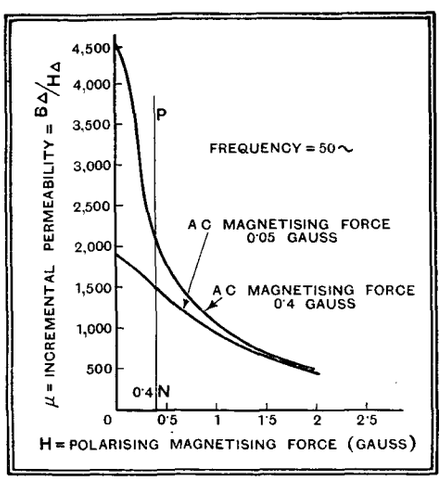

Fig. 11.—Incremental permeability curves, to illustrate determination of the point of working permeability.

a curve showing the incremental values of B and H, i.e., BΔ and HΔ, for the given polarising magnetising force.

Since such a curve is not available we take our cue from the first article and get the alternating magnetic flux somewhere in the region where H = 0.05 gauss. This gives a value of BΔ = 100 lines per sq. cm. When the BΔ-HΔ curve is available for the required degree of DC magnetisation it is drawn as in Fig. 10, and the same method applied as before. The value of BΔ is then obtained for a given alternating current through the winding.

Although we were foiled on the last lap owing to absence of the desired data respecting BΔ and HΔ, there is another method of approach to the problem of designing air-gap chokes which is possible if we have an incremental permeability curve corresponding to the frequency of operation and the current the choke will carry.

At this point we must explain that in a radio set both of these vary. The frequency may have any value within the range 40 to 9,000 c/s in an average set, whilst the current depends upon both frequency and signal strength. It is greatest at the low frequencies. Choosing 50 cycles as a standard frequency and taking the alternating magnetising force on the core material alone, apart from the air gap, to give a value of 0.05 gauss, we can plot curves which are useful for design purposes. The same procedure can, of course, be applied to any value of alternating magnetisation provided curves of the type illustrated in Fig. 11 are available.

Simplified Design

The theory of the method about to be described is somewhat beyond our present purpose. Although the mathematics is quite elementary, some of the underlying physical concepts are rather specialised. The reader who desires further information, however, can refer to Journal Am. Inst. E.E., p. 128, Vol. 46, 1927.

Using the mathematical formulæ in this paper, the curve of Fig. 8 and either of the curves of Fig. 11 (according to the value of HΔ required), a curve of the form shown in Fig. 12 can be deduced. Vertically, the values are LI^2/V, where L is the inductance of the choke when the AC magnetisation on the core is 0.05 gauss, I is the anode feed current in amperes and V the volume of the core material (excluding insulation between the laminations) in cubic centimetres. The effective cross-section of the core is assumed to be uniform. The horizontal values are $\frac{nI}{l}$, where n is the number of turns of wire on the core, and l its mean length in centimetres. That is to say, $\frac{NI}{l}$ is the number of ampere turns per cm. length of the core. The numbers at intervals on the curve are the ratios of lg/l. Between consecutive numbers the value can readily be assessed by eye. The best way of showing the use of the curve is to take an example.

Suppose we require to know the air-gap

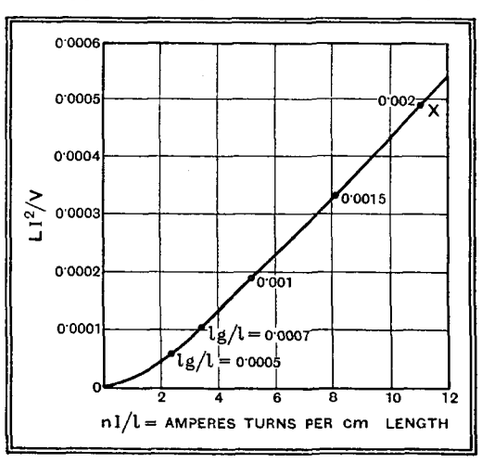

Fig. 12.—Curve from which the necessary length of air gap may be estimated.

to be inserted in a core composed of stampings of the type illustrated in Fig. 13, given that an inductance of 20 henrys is required, with a unidirectional current of 25 milliamperes, and an alternating magnetising force H = 0.05 gauss or thereabouts. Let us take sufficient stampings to make the total cross-section at the centre of the core approximately square. The cross-sectional area of core material is then about 1.95 sq. cm. The flux, whether unidirectional or alternating,

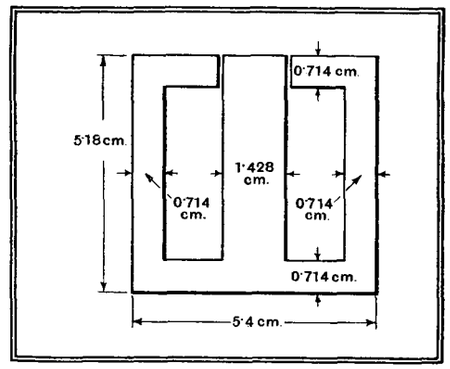

Fig. 13.—Core of uniform cross-sectional area.

traverses the core rather in the manner of Fig. 9, but as the two sides are in parallel, since the flux from the centre limb divides into two equal parts, the net effect is that of a core of uniform cross-section, as shown in Fig. 9. The object of the window type of core, however, is to reduce the magnetic leakage. The mean length of the core l is 14 cm., so the volume $V = 14 \times 1.95 = 27$ cubic centimetres. Thus, $LI^2/V = 20 \times (0.025)^2/27 = 0.00047$. Incidentally, we may remark that when this is multiplied by 107 it represents twice the electromagnetic energy which would disappear if the DC though the choke were reduced to zero. It is for this reason, i.e., storage of electromagnetic energy, that sparks and arcs are obtained if the lead is pulled off an electromagnet.

Length of Gap

Having computed the vertical component on the curve of Fig. 12 we can now get the horizontal one and the value of the air gap. The number of ampere turns per cm. is read off as 11.3, and this corresponds to a ratio of $lg/l = 0.002$, nearly. Since l is 14 cm. the length of the air gap is $14 \times 0.002 = 0.028$ cm. or 0.28 millimetre, which is very small. To get the number of turns on the coil we have

$$\frac{nI}{l} = 11.3 \text{ or } n = \frac{11.3l}{I} = \frac{11.3 \times 14}{0.025} = 6{,}330$$

There is no difficulty in accommodating 6,330 turns on the core shown in Fig. 13, but as the thing we are designing must act as a choke of low resistance it is essential to calculate the latter. If the resistance were high there would be an appreciable drop in DC volts on the choke, which is very undesirable, since one aims to get as much as possible on the valve anode. Allowing for a circular former on

Design of Output Chokes—

which the coil is wound the total cross-sectional area including insulation is approximately 3.6 sq. cm. The turns being 6,330 means that there are to be this number of squares available, each containing a circular wire. Thus the area of each square is $3.6/6{,}330 = 0.00057$ sq. cm., so the length of the side of each square is $\sqrt{0.00057} = 0.0239$ cm.

Adapting the Design

From a wire gauge table we find that the nearest size of enamelled wire is No. 35. Now the mean length per turn is about 10 cm., so the length of the whole coil is $10 \times 6{,}330$ cm. $= 633$ metres. The wire table gives 0.474 ohms as the resistance per metre, so the coil resistance is $633 \times 0.474 = 300$ ohms. Since the feed current is 25 mA. the steady voltage drop is $300 \times 0.025 = 7.5$ volts, which is quite harmless. It appears therefore that this choke ought to be able to do duty satisfactorily under the conditions laid down at the beginning. Also, it will be evident that these conditions could be made more stringent. For example, it would be quite easy to increase the air gap and wind the bobbin with more turns, thereby obtaining a higher inductance with a larger feed current. To do this it would be necessary to get more points on the curve of Fig. 12.

The choke problem might occur in another form. Since it is seldom practicable to have special stampings for every choke required (owing to the high cost of dies for punching out the stampings, which in themselves are relatively cheap), it may be necessary to fit a certain type of stamping to a particular job. Thus, if we have to design a choke with the stampings of Fig. 13, but using a gap 0.28 millimetre, where do we find ourselves?

Assuming that the alternating magnetising force on the iron is 0.05 gauss, so that we can still use the curve of Fig. 12 (otherwise a new curve is required for the value of $H\Delta$ in question) the working point is shown at X. This fixes both $\frac{LI^2}{V} = 0.00047$ and $\frac{nI}{l} = 11.3$, which are the same as before. Hence, $nI = 11.3 \times l = 11.3 \times 14 = 158$, and since $V = 25$ c.c. $LI^2 = 25 \times 0.00047 = 0.0118$. From the first of these we get $I = 158/n$, which on substitution in the second gives $\frac{L \times 158^2}{n^2} = 0.0118$ or $\frac{L}{n^2} = \frac{0.0118}{158^2} = 4.7 \times 10^{-7} n^2$. In designing the choke we have to comply with the conditions that $nI = 158$ and $LI^2 = 0.0118$, or what comes to the same thing. Suppose that $I = 30$ mA. and the largest permissible volt drop is 20. Then the resistance of the winding must not exceed $\frac{20 \times 1{,}000}{30} = 670$ ohms. Knowing the available winding space it is now possible to calculate the number of turns to give this resistance. Since $L = 4.7 \times 10^{-7}$ its value would be 47 henrys if n were 10,000. The exact number of turns it is possible to get into the available space to give a resistance of 670 ohms is left for the reader to calculate if he feels like it.

Finally, if the reader carries out the graphical construction in connection with Fig. 10, using the air-gap 0.028 cm. obtained above, where $l/lg = 500/1$, he will find that the direct current B—H curve of the choke is substantially that of the air-gap alone. Translated into practical language, a gapped choke is simply a means of constructing an air-cored coil with a gap whose length is extremely small compared with that of the mean path length of the flux round the winding.

A New Station Indicator

Spiral Scale for Legibility

ORDINARY station-calibrated tuning dials generally suffer from the disadvantages of illegibility and overcrowding unless unduly large and, in any case, the indication given is often ambiguous.

Improvements in all these respects seem to be offered by a station scale designed by a reader, Mr. G. Chapman; a work-model of this device in one of its several forms is shown in the accompanying illustration.

Station names are printed on a scale wound spirally round a drum which is caused to move axially at the same time as it rotates. Thus the number of names accommodated on the drum may be increased, or, for the same number of names as at present, the spacing and size of type may be increased. For instance, a drum only 4in. in diameter with a pitch of ¼in. and eight turns will have a total scale length of about 8ft.

Provided that the difficulties of calibration can be overcome, tuning is rendered easy and certain, as the names of stations appear one at a time behind a long narrow aperture. In the illustration the escutcheon plate in which this aperture is cut has been removed for clearness.

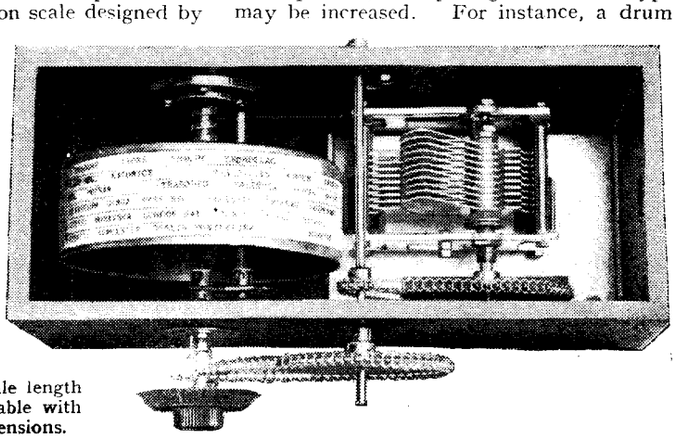

A CLEAR STATION-NAME SCALE. As the dial rotates it also moves along its shaft and so no space is wasted. An effective scale length of about 8 ft. is obtainable with a drum of normal dimensions.

DISTANT RECEPTION NOTES

TRULY *The Wireless World* goes everywhere! The request that I made recently in these notes for first-hand information about Motala brought me a charming letter from a student at the University of Upsala. Its contents were a surprise to me, and I think they will be to most readers as well. The new Motala station, rated at 150 kilowatts, came into full operation, taking over the whole of the Swedish long-wave programme service, more than two months ago. Certainly one would never have guessed it from the signal strength obtainable—in the Midlands and South of England, at any rate. Turning back the pages of my long-distance diary, I see that the last occasion on which I received Motala with full loud-speaker volume was on May 25th. Since then the station, if heard at all, has come in very feebly.

So far, I have no record of reception of Brasov's 150-kilowatt station, and, since there has been no interference with Huizen, it is apparently not using the 1,875-metre wavelength, whatever else it may be doing. The Rumanian station is going to find it difficult enough to secure a place on the long waves. What will happen when Warsaw goes up to 200 kilowatts, the Deutschland-sender to 150, and the big Madrid long-wave station rated at 150 kilowatts asserts its right to an individual channel?

The plans for the new Warsaw station have already been passed, and I believe that the construction of the bigger Deutschland-sender is under way. Madrid's 150-kilowatt station will probably not be ready until the autumn of next year.

It really seems as if the position on the long waves might end in a kind of stalemate, for there are certainly not sufficient channels to accommodate all the stations that want them. I suppose that the big transmitters will "muscle in" by sheer force.

The 150-kilowatt Madrid station is not superfluous. Spain is a large and mountainous country, and it needs a powerful long-wave transmitter. This station forms part of the Spanish Regional scheme which was worked out some time ago, though it has since hung fire. The authorities are now going right ahead with it, and within the next eighteen months it should be completed. It includes six medium wave stations at Barcelona, Madrid, Valencia, Corunna, Seville, and Vizcaya, as well as relays in other localities. The rating of the main stations will be from 20 to 60 kilowatts.

Portugal is also getting seriously to work on her Regional scheme. The Lisbon station is to go up to 100 kilowatts, whilst stations of smaller power will be erected in other places. There is to be a 20-kilowatt short-wave station to serve the Portuguese Empire—and if you examine a map of the world you may be surprised to find how big this is.

D. EXER.

FOUNDATIONS OF WIRELESS

Part XXVI.—More About the Frequency-changer

By A. L. M. SOWERBY, M.Sc.

THE choice of a suitable range for the oscillator and the practical methods of maintaining the interval between the oscillator and signal frequencies are reviewed. The section concludes with an explanation of the origin of self-generated whistles on long and medium waves.

IN the preceding instalment we discussed the fundamental principle of the frequency-changer, and made the acquaintance of two practical frequency-changing circuits. One of these used two valves (which may sometimes be included in one bulb to form a triode-pentode), while the other used a pentagrid. In the latter case the modulator portion of the valve may very well be made up as a pentode instead of a tetrode; the valve is then called an *octode*.

Conversion Conductance

In the ordinary amplifying valve the mutual conductance is expressed in terms of milliamps of signal-current in the anode circuit per volt of signal applied to the grid. The same rating can be applied to a frequency-changing valve, but it is not of much help in receiver-design. In this particular case we are interested in milliamps of current *at intermediate frequency* per volt of signal (high-frequency) on the grid. This is known as the *conversion conductance* of the valve, and quite evidently depends on the efficiency of conversion as well as on the amplifying abilities of the modulator.

It is found that the conversion conductance is approximately equal to half the ordinary mutual conductance, provided that this is measured with the electrode by which the oscillation is introduced (G1 in a pentagrid, control grid of V1 in the two-valve changer of Fig. 134) at the most positive voltage to which the oscillation carries it. In the case of the pentagrid, whose curves are given in Fig. 136, the conversion conductance will therefore be about 2 mA/v., this being half the mutual conductance, taken in the usual way from the Eg – Ia curve, possessed by the valve when EG1 = O.

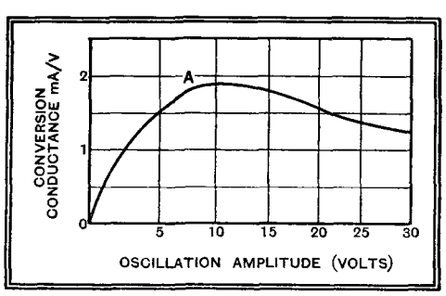

Fig. 137.—Type of relationship between oscillation amplitude and conversion conductance of frequency-changer. The oscillation amplitude is not critical so long as it exceeds a certain indeterminate value in the neighbourhood of A.

For this simple relation to hold it is necessary that the amplitude of oscillation should be sufficient; in the pentagrid case this implies that at the negative peak of oscillation the modulator slope is reduced to zero. Too much oscillation puts the modulator anode current down to zero for too long a time, resulting in reduced gain; there is, therefore, an optimum oscillation amplitude for every valve. Fig. 137 shows the type of relationship between this and conversion conductance; it is evident that there is less danger of losing gain by too powerful than by too weak an oscillation. It is usual, therefore, to arrange that at no part of the waveband to be covered by the set shall the oscillation amplitude fall below a value corresponding to a point at or near A on the curve. This is done by adjustment of turns on the reaction coil (L3, Figs. 134 and 135), after which the oscillator can be left to look after itself.

We have seen that the intermediate frequency is in all usual cases equal to the difference between the signal frequency and the oscillator frequency. With an IF of 110 kc/s the oscillator must therefore be tuned to a frequency either 110 kc/s greater or 110 kc/s less than the signal. If the oscillator frequency fo is higher than the signal frequency fs the intermediate frequency is (fo – fs). If it is lower, the IF is (fs – fo). At first sight it would seem a matter of indifference which of these alternatives were chosen. There are, however, marked practical advantages in making fo higher than fs.

Ganging

Suppose the set is to tune from 1,500 to 550 kc/s (200 to 545 metres). Then, if of higher frequency, the oscillator must run from (1,500 + 110) to (550 + 110), i.e., from 1,610 to 660 kc/s. If, on the other hand, the oscillator is of lower frequency than the signal, it must run from (1,500 – 110) to (550 – 110), or 1,390 to 440 kc/s. The former range gives 2.44, the latter 3.16 as the ratio between highest and lowest frequency. Since even the signal-circuit range of 2.72 is often quite difficult to achieve, owing to the high minimum capacities likely to be present in a finished set, the oscillator range from 1,610 to 660 kc/s would always be chosen in practice.

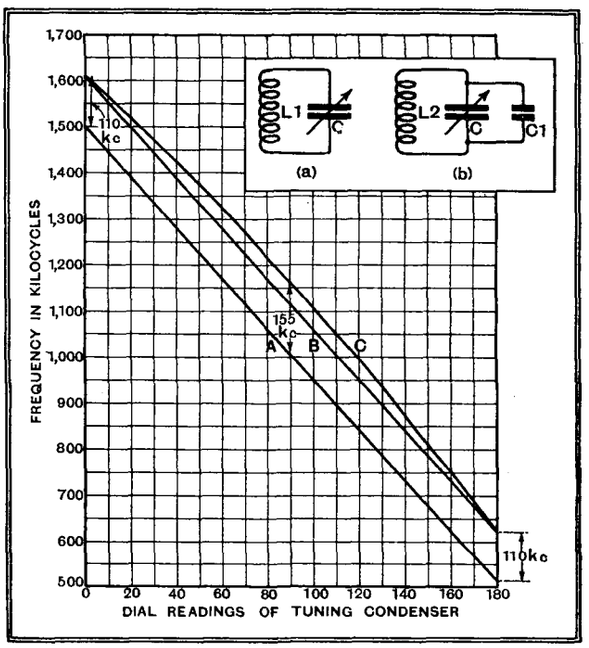

Fig. 138.—(a) Represents signal circuit, (b) shows the oscillator circuit, in which the waverange has been curtailed to the required extent by putting C1 in parallel with C. Curves show failure of ganging. A is signal frequency, B required oscillator frequency, and C, oscillator frequency actually obtained.

It is evident, since the frequency difference between signal and oscillator must be kept constant, that the oscillator must be tuned in a manner that is in some way different from the tuning of the signal-frequency circuits. There are three methods of tuning a superheterodyne. First, the signal-frequency circuits may all be made alike, and tuned by a multi-section gang condenser, leaving the oscillator to be tuned independently by another knob. The modern insistence on one-knob tuning is generally held to bar this method, though there is obviously no objection to it on purely electrical grounds.

At first sight it might appear impossible

Foundations of Wireless—

to tune the oscillator with a condenser section identical with those tuning the signal-frequency circuits, because the required ratio of maximum to minimum capacity is different. This difference, however, can be very readily adjusted by putting a fixed condenser either in series or in parallel with the oscillator section C, as shown in the insets to Figs. 138 and 139. The former will increase the tuning capacity by C1 at all setting of the tuning dial, while the second will reduce the tuning capacity by a small amount when C is set to a low capacity, but by a much greater amount when the capacity of C is large. Either, then, will reduce the ratio of maximum to minimum capacity in the oscillator circuit below that of the signal-frequency circuits, so that by correct choice of extra capacity and of oscillator coil inductance the oscillator may be set to cover the exact frequency range required.

The curves of Figs. 138 and 139 show how the tuning runs in the two cases. In both fo is removed from fs by the required amount at the extreme ends of the tuning scale, but errors of 45 and 66 kc/s respectively occur towards the middle. Owing to the sharp tuning of the IF amplifier, the user of a set will always tune the oscillator so that the IF carrier produced has the desired frequency; the signal-frequency circuits, therefore, will be distuned by the amount of the errors shown, with a consequent loss of amplification.

Neutralising Ganging Errors

It will be seen that the errors resulting in the two suggested methods of ganging are in opposite directions. It is possible, by a suitable combination of both series and parallel condensers, to reduce the ganging errors so far that at three points on the tuning scale oscillator and signal circuits are tuned to frequencies differing *exactly* by the required IF, while at intermediate points the worst error results in mistuning of the signal-frequency circuits by no more than about one-fifth of one per cent.

This gives us the second method of tuning a superhet, where the oscillator tuning circuit is that of Fig. 140. Here C is a section of an ordinary gang condenser, and has at every dial reading the same capacity as its companion sections tuning the signal-frequency circuits. With S1 and S2 closed, we have C1 to increase the minimum capacity and C2 to decrease the maximum, their relative values being critical for accurate ganging.[1] Opening S1 increases the inductance of the tuned circuit to enable the long-wave band (150 to 300 kc/s) to be covered by the set, at the same time decreasing the series condenser to the resultant of C2 and C3. At the same time S2 is opened to throw in the

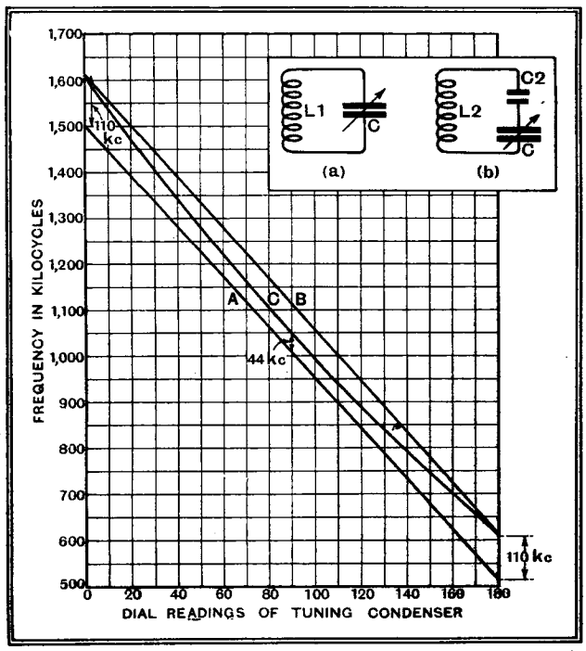

Fig. 139.—(a) Represents signal circuit, (b) oscillator circuit, waverange now contracted to the required extent by putting C2 in series with C. Curves show failure of ganging, their meaning being as in Fig. 138.

extra reaction winding L4, and S3 is closed to add C4 to the minimum capacity in the circuit. The arrangement as a whole is shown, for simplicity, with a triode as oscillator, but it is equally suitable for use with a pentagrid or other specialised frequency-changer.

There is an alternative method of persuading the oscillator-circuit to tune at a constant frequency-difference from the signal circuits. It consists simply in using a special multi-section condenser, in which the section tuning the oscillator has vanes shaped to give exactly the required results. Evidently this can be done only for one wave-band; for the long waves, therefore, the auxiliary fixed condensers must again be used. The circuit is that of Fig. 140 with C1 and C2 omitted, it being understood that C is now no longer identical in capacity with its fellows tuning the signal circuits, but has specially shaped vanes.

The choice between this third method of tuning and the second shown in Fig. 140 is purely a matter of convenience. The third method can claim slightly higher accuracy of ganging, and a reduction of components. To set against this there is some lack of flexibility in set design, it being necessary to design the oscillator section of the condenser for one particular set of coil-inductances and a predetermined intermediate frequency. With the second method any ordinary gang-condenser can be used, since the sole requirement is identity of sections, while any choice of coil-inductance and intermediate frequency can be accommodated by recalculating the values of the auxiliary fixed condensers.

Owing to the characteristics of the frequency-changer, a superheterodyne is susceptible to certain types of interference from which an ordinary set is free. Of these the commonest is *second-channel* or *image* interference. How this arises can be seen most clearly from an example.

Whistles

Let us suppose we have a completed superheterodyne, in which the intermediate frequency is, to take a round number, 100 kc/s. We tune it to Breslau, broadcasting on 950 kc/s. To bring in this station the oscillator, always at a higher frequency than the signal, will have to be tuned to 1,050 kc/s to make (fo − fs) equal to the 100 kc/s required. Stations adjacent to Breslau (on 941 and 959 kc/s) will give rise to combination currents at 91 and 109 kc/s respectively, and we are going to assume that the IF amplifier is tuned sufficiently sharply to reject these. But if any detectable signal at 1,150 kc/s reaches the grid of the frequency-changer it will combine with the oscillation to produce (1,150 − 1,050) = 100 kc/s again. This signal will be accepted and amplified by the IF stages, being heard as a whistle varying in pitch as the set is tuned round about Breslau's wavelength.

The whistle is formed at the second detector, and has a frequency which is the difference of that of the two carriers supplied. The variation of pitch with tuning can be followed from the table below, in which it is assumed that the set is tuned near Breslau's wavelength, and that signals from London National (1,149 kc/s) are reaching the frequency-changer.

TABLE.

Set Tuned to: kc/s.	Oscillator at: kc/s.	IF Carrier due to Breslau (950 kc/s).	IF Carrier due to London Nat. (1149 kc/s).	Difference. (Pitch of Whistle).
		kc/s.	kc/s.	kc/s.
945	1,045	95	104	9
946	1,046	96	103	7
947	1,047	97	102	5
948	1,048	98	101	3
949	1,049	99	100	1
949½	1,049½	99½	99½	0
950	1,050	100	99	1
951	1,051	101	98	3
952	1,052	102	97	5
953	1,053	103	96	7
954	1,054	104	95	9

Since the two stations both give rise to carriers to which the IF amplifier is tuned, this part of the set can give no protection against interference of this sort. The only possible way to avoid the whistle is to ensure that no detectable signal from London National reaches the frequency-changer when the set is tuned away from it by the necessary 200 kc/s (twice the IF). The preselector is included to provide, before frequency-changing, the selectivity necessary to discriminate between stations separated by this amount. In most superhets. the preselector does not entirely suc-

[1] For formulæ to compute values and residual errors, see *The Wireless Engineer*, February, 1932, p. 70.

Foundations of Wireless—

ceed in cutting out the local stations at very short range, so that two whistles are found, one for each local station, when the set is tuned to a station of frequency twice the IF in kc/s below the frequency of either of them.

Suppose now that, disgusted with second-channel interference, we switch over and try our luck on the long waves. We are attracted by the programme from Warsaw (224 kc/s), but as we tune in we find—a whistle! How does this one arise?

Signal on 224 kc/s means oscillator on 324 kc/s; second-channel interference, therefore, from a station on 424 kc/s. Barring a low-power station in Russia, no transmitter on or near this frequency is listed. But there are oscillator harmonics—an oscillation on 324 kc/s will contain weaker components on 648, 972, 1,296 kc/s, etc., which can give whistles from stations on 548 or 748, 872 or 1,072, 1,196 or 1,396 kc/s. Clearly (if we are Londoners) 872 is the culprit, for 877 is the frequency of London Regional. In this case again the whistle is due to a combination frequency arising from a station to which we are not tuned, but combining this time with a *harmonic* of the oscillator-frequency instead of with the fundamental.

We might, perhaps, design our oscillator for low harmonic content with the idea of reducing the interference, but it is clear that once again more selective circuits before the frequency-changer would prevent the trouble.

Since second-channel interference is due to the arrival at the frequency-changer of signals spaced away from those desired by twice the intermediate frequency, the higher this is made the less stringent are the demands made on the selectivity of the preselector. But while helping to suppress whistles, a high IF leads to increased difficulty in obtaining high adjacent-channel selectivity, owing to the fact that it becomes progressively more difficult to maintain a high value of L/r in the IF tuned circuits as the frequency is raised.

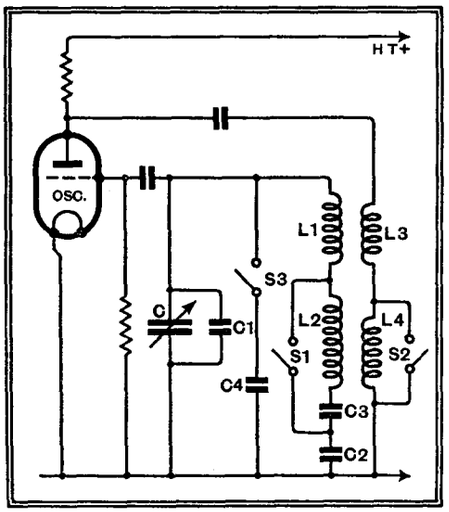

Fig. 140.—Complete dual waverange oscillator circuit, showing arrangement of series ("padding") condensers C2 and C3, and of parallel ("trimming") condensers C1 and C4. By correct choice of values for these, ganging may be made practically perfect.

Experience indicates that the preselector should contain two tuned circuits if the IF is about 120 kc/s, but that one is just adequate for a simple set if the IF is raised to 450 kc/s. With the still higher IF (about 1,600 kc/s) used in "Single-Span" receivers an untuned filter, rejecting frequencies above about 2,000 kc/s, provides sufficient preselection. But if a stage of high-frequency amplification precedes the frequency-changer, it is usually advisable to increase by one the number of tuned circuits just suggested.

Letters to the Editor

The Editor does not hold himself responsible for the opinions of his correspondents

A High Quality American Receiver

MAY I be permitted to point out one or two discrepancies in the letter written by Mr. R. E. Blakey on the "Howard-Grand" receiver in your issue of June 21st.

I fail to see how the grid of the first 76 valve functions, as in Mr. Blakey's theoretical diagram the grid of this valve is shorted to earth, as also is the lower resistance on the diode potential divider.[1]

Mr. Blakey asserts that if the frequency range be split up and fed into a low-frequency amplifier and a high-frequency amplifier, and the output from each fed to two separate speakers, it is highly advantageous, and I fully agree with this. However, I fail to see the advantage when the combined outputs are fed into a common amplifier as surely this is defeating its own object. Mr. Blakey mentions that this receiver has an undistorted output of 20 watts and I assume that this enormous output for a domestic receiver is obtained through the use of mains Class B amplification, which necessitates the use of a driver transformer, thus introducing a certain amount of distortion. I fail to see, therefore, how this receiver is capable of giving the quality of that "Rolls-Royce" of amplifiers—*The Wireless World* Quality Amplifier. M. MISTOVSKI, A.M.I.R.E.

Manchester.

[1] (A resistance should have been inserted in the lead between the grid of the first 76 valve and the earth line.—ED.)

Accumulators for H.T.

I WILL not begin by telling you how many centuries I have been reading our paper, because if you so wished you could tell from your own records.

In the design of radio receivers you adhere to two sharply defined classes—the mains and the battery types. The latter is always treated in the same general aspect that the performance must be curtailed in the interests of battery economy. As you are well aware, in all the larger cities there are numerous H.T. accumulator hire services, so that quite a goodly proportion of readers have greater potentialities available for an intermediate design of receiver.

I have omitted those who have their own accumulators since it is a fact that they seldom give continued satisfaction because they are rarely looked after properly, whereas a hire battery, besides being numerically far more common, is maintained nearer the manufacturer's ideal, and therefore capable of performance far in excess of any dry battery.

Allowing a current drain of fifteen to twenty-five milliamperes, and probably omitting decoupling, which in this new type alone is possible, our versatile designers could do themselves much better justice. After all, a man who builds any of your excellent battery receivers, spending a very considerable amount of money in the process, is scarcely going to spoil his maximum benefit by so trivial a handicap when it is not always necessary. Many people are looking forward to a revised version of the Single Span battery receiver, incorporating more recent improvements and modifications, and this in preference to all others would be an ideal receiver if unhampered by strict battery economy considerations.

WALTER J. JOUGHIN.

London, S.E.22.

[It would be interesting to have the views of other readers.—ED.]

Crystal Reception

REGARDING the receptive range of crystal receivers, in 1924 I kept a log from 10 p.m. until midnight GMT of the 5XX programme. It was begun the night we left the U.K. on a voyage to Buenos Aires. The receiver was 31A type and I logged various items each night. The day after we passed the Cape Verde islands 5XX went off the dial. Greatest distance was about 2,300 miles, and I subsequently sent the report in to the B.B.C. Another peculiar instance was the reception on CW of Monsanto weather report on a crystal, there being no CW generator on board. A further DX example—receiving in 1929 5GB in Batavia on a straight 4-valve.

Highbury. E. W. HARRIS.

Fluorescent Screens

IN the issue of *The Wireless World* for June 14th, 1935, you have a short reference to the subject of fluorescent screens, in which a mixture of cadmium tungstate and zinc phosphate is recommended. According to my measurements, such a mixture gives, it is true, a fairly white light, but the efficiency is only about 0.5 Hefner candle-power per watt,* whereas with other materials which I have written about in a recent paper, efficiencies of 5 to 6 Hefner candle-power per watt are attained, also with a white fluorescent light. I should like to call your attention to this paper, for I venture to think that the test results, set out in a rather illuminating way, are helpful in forming an up-to-date opinion on the subject of fluorescent screens. The paper is in the *Zeitschrift für Technische Physik*, No. 3, Vol. 16, 1935.†

Berlin. M. VON ARDENNE.

* 1 Hefner candle equals 0.9 International Candle.

† An abstract of the article in question appeared in the June issue of *The Wireless Engineer* (Abstract No. 1947).

PRINCIPAL BROADCASTING STATIONS OF EUROPE

Arranged in Order of Frequency and Wavelength

(This list is included in the first issue of each month. Stations with an aerial power of 50 kW. and above in heavy type)

Station.	kc/s.	Tuning Positions.	Metres.	kW.
Kaunas (Lithuania)	155		1935	7
Brazov (Romania)	160		1875	150
Huizen (Holland). (*Until* 3.40 *p.m.*)	160		1875	7
Kootwijk (Holland) (*Transmits Hilversum programme after* 3.40 *p.m.*)	160		1875	50
Lahti (Finland)	166		1807	40
Moscow, No. 1, RW1 (Komintern) (U.S.S.R.)	174		1724	500
Paris (Radio Paris) (France)	182		1648	80
Istanbul (Turkey)	187.5		1600	5
Berlin (Deutschlandsender Zeesen) (Germany)	191		1571	60
Droitwich	200		1500	150
Minsk, RW10 (U.S.S.R.)	208		1442	35
Reykjavik (Iceland)	208		1442	16
Motala (Sweden). (*Relays Stockholm*)	216		1389	150
Novosibirsk, RW76 (U.S.S.R.)	217.5		1379	100
Warsaw, No. 1 (Raszyn) (Poland)	224		1339	120
Ankara (Turkey)	230		1304	7
Luxembourg	230		1304	150
Kharkov, RW20 (U.S.S.R.)	232		1293	20
Kalundborg (Denmark)	238		1261	60
Leningrad, RW53 (Kolpino) (U.S.S.R.)	245		1224	100
Tashkent, RW11 (U.S.S.R.)	256.4		1170	25
Oslo (Norway)	260		1154	60
Moscow, No. 2, RW49 (Stchelkovo) (U.S.S.R.)	271		1107	100
Tiflis, RW7 (U.S.S.R.)	280		1071.4	35
Rostov-on-Don, RW12 (U.S.S.R.)	355		845	20
Budapest, No. 2 (Hungary)	359.5		834.5	20
Sverdlovsk, RW5 (U.S.S.R.)	375		800	50
Geneva (Switzerland). (*Relays Sottens*)	401		748	1.3
Moscow, No. 3 (RCZ) (U.S.S.R.)	401		748	100
Voroneje, RW25 (U.S.S.R.)	413.5		726	10
Oulu (Finland)	431		696	1.2
Ufa, RW22 (U.S.S.R.)	436		688	10
Hamar (Norway) (*Relays Oslo*)	519		578	0.7
Innsbruck (Austria). (*Relays Vienna*)	519		578	1
Ljubljana (Yugoslavia)	527		569.3	5
Viipuri (Finland)	527		569.3	10
Bolzano (Italy)	536		559.7	1
Wilno (Poland)	536		559.7	16
Budapest, No. 1 (Hungary)	546		549.5	120
Beromünster (Switzerland)	556		539.6	100
Athlone (Irish Free State)	565		531	60
Palermo (Italy)	565		531	4
Stuttgart (Mühlacker) (Germany)	574		522.6	100
Grenoble, P.T.T. (France)	583		514.6	15
Riga (Latvia)	583		514.6	15
Vienna (Bisamberg) (Austria)	592		506.8	100
Rabat (Radio Maroc) (Morocco)	601		499.2	25
Sundsvall (Sweden). (*Relays Stockholm*)	601		499.2	10
Florence (Italy). (*Relays Milan*)	610		491.8	20
Cairo (Abu Zabal) (Egypt)	620		483.9	20
Brussels, No. 1 (Belgium). (*French Programme*)	620		483.9	15
Lisbon (Bacarena) (Portugal)	629		476.9	20
Tröndelag (Norway)	629		476.9	20
Prague, No. 1 (Czechoslovakia)	638		470.2	120
Lyons, P.T.T. (La Doua) (France)	648		463	100
Cologne (Langenberg) (Germany)	658		455.9	100
North Regional (Slaithwaite)	668		449.1	50
Sottens (Radio Suisse Romande) (Switzerland)	677		443.1	25
Belgrade (Yugoslavia)	686		437.3	2.5
Paris, P.T.T. (Ecole Supérieure) (France)	695		431.7	7
Stockholm (Sweden)	704		426.1	55
Rome, No. 1 (Italy)	713		420.8	50
Kiev, RW9 (U.S.S.R.)	722		415.5	36
Tallinn (Esthonia)	731		410.4	20
Madrid, EAJ2 (Radio España) (Spain)	731		410.4	3
Munich (Germany)	740		405.4	100
Marseilles, P.T.T. (France)	749		400.5	5
Katowice (Poland)	758		395.8	12
Scottish Regional (Falkirk)	767		391.1	50
Toulouse, P.T.T. (France)	776		386.6	2
Leipzig (Germany)	785		382.2	120
Barcelona, EAJ1 (Spain)	795		377.4	5
Lwow (Poland)	795		377.4	16
West Regional (Washford Cross)	804		373.1	50
Milan (Italy)	814		368.6	50
Bucharest (Romania)	823		364.5	12
Moscow, No. 4, RW39 (Stalina) (U.S.S.R.)	832		360.6	100
Berlin (Funkstunde Tegel) (Germany)	841		356.7	100
Bergen (Norway)	850		352.9	1
Sofia (Bulgaria)	850		352.9	1
Valencia (Spain)	850		352.9	1.5
Simferopol, RW52 (U.S.S.R.)	859		349.2	10
Strasbourg, P.T.T. (France)	859		349.2	35
Poznan (Poland)	868		345.6	16
London Regional (Brookmans Park)	877		342.1	50
Graz (Austria). (*Relays Vienna*)	886		338.6	7
Helsinki (Finland)	895		335.2	10
Hamburg (Germany)	904		331.9	100
Toulouse (Radio Toulouse) (France)	913		328.6	60
Limoges, P.T.T. (France)	913		328.6	0.5
Brno (Czechoslovakia)	922		325.4	32
Brussels, No. 2 (Belgium). (*Flemish Prog'mme*)	932		321.9	15
Algiers, P.T.T. (Radio Alger) (Algeria)	941		318.8	12
Göteborg (Sweden). (*Relays Stockholm*)	941		318.8	10
Breslau (Germany)	950		315.8	100
Paris (Poste Parisien) (France)	959		312.8	60
Belfast	977		307.1	1
Genoa (Italy). (*Relays Milan*)	986		304.3	10
Hilversum (Holland). (7 *kW.* till 6.40 p.m.)	995		301.5	20
Bratislava (Czechoslovakia)	1004		298.8	13.5
Midland Regional (Droitwich)	1013		296.2	50
Barcelona, EAJ15 (Radio Asociación) (Spain)	1022		293.5	3
Cracow (Poland)	1022		293.5	2
Königsberg (Heilsberg Ermland) (Germany)	1031		291	17
Parede (Radio Club Português) (Portugal)	1031		291	5
Leningrad, No. 2, RW70 (U.S.S.R.)	1040		288.5	10
Rennes, P.T.T. (France)	1040		288.5	40
Scottish National (Falkirk)	1050		285.7	50
Bari (Italy)	1059		283.3	20
Tiraspol, RW57 (U.S.S.R.)	1068		280.9	4
Bordeaux, P.T.T. (Lafayette) (France)	1077		278.6	30
Zagreb (Yugoslavia)	1086		276.2	0.7
Falun (Sweden)	1086		276.2	2
Madrid, EAJ7 (Union Radio) (Spain)	1095		274	7
Madona (Latvia)	1104		271.7	50
Naples (Italy). (*Relays Rome*)	1104		271.7	1.5
Moravska-Ostrava (Czechoslovakia)	1113		269.5	11.2
Fécamp (Radio Normandie) (France)	1113		269.5	10
Alexandria (Egypt)	1122		267.4	0.25
Newcastle	1122		267.4	1
Nyiregyhaza (Hungary)	1122		267.4	6.2
Hörby (Sweden). (*Relays Stockholm*)	1131		265.3	10
Turin, No. 1 (Italy). (*Relays Milan*)	1140		263.2	7
London National (Brookmans Park)	1149		261.1	20
North National (Slaithwaite)	1149		261.1	20
West National (Washford Cross)	1149		261.1	20
Kosice (Czechoslovakia). (*Relays Prague*)	1158		259.1	2.6
Monte Ceneri (Switzerland)	1167		257.1	15
Copenhagen (Denmark). (*Relays Kalundborg*)	1176		255.1	10
Kharkov, No. 2, RW4 (U.S.S.R.)	1185		253.2	10
Frankfurt (Germany)	1195		251	17
Prague, No. 2 (Czechoslovakia)	1204		249.2	5
Lille, P.T.T. (France)	1213		247.3	60
Trieste (Italy)	1222		245.5	10
Gleiwitz (Germany). (*Relays Breslau*)	1231		243.7	5
Cork (Irish Free State) (*Relays Athlone*)	1240		241.9	1
Juan-les-Pins (Radio Côte d'Azur) (France)	1249		240.2	2
Kuldiga (Latvia)	1258		238.5	10
Rome, No. 3 (Italy)	1258		238.5	1
San Sebastian (Spain)	1258		238.5	3
Nürnberg and Augsburg (Germany) (*Relay Munich*)	1267		236.8	2
Christiansand and Stavanger (Norway)	1276		235.1	0.5
Dresden (Germany) (*Relays Leipzig*)	1285		233.5	1.5
Aberdeen	1285		233.5	1
Austrian Relay Stations	1294		231.8	0.5
Danzig. (*Relays Königsberg*)	1303		230.2	0.5
Swedish Relay Stations	1312		228.7	1.25
Magyarovar (Hungary)	1321		227.1	1.25
German Relay Stations	1330		225.6	1.5
Montpellier, P.T.T. (France)	1339		224	5
Lodz (Poland)	1339		224	1.7
Dublin (Irish Free State) (*Relays Athlone*)	1348		222.6	0.5
Milan, No. 2 (Italy) (*Relays Rome*)	1348		222.6	4
Turin, No. 2 (Italy). (*Relays Rome*)	1357		221.1	0.2
Basle and Berne (Switzerland)	1375		218.2	0.5
Warsaw, No. 2 (Poland)	1384		216.8	2
Lyons (Radio Lyons) (France)	1393		215.4	5
Tampere (Finland)	1420		211.3	0.7
Paris, (Radio LL) (France)	1424		210.7	0.8
Béziers (France)	1429		209.9	1.5
Miskolc (Hungary)	1438		208.6	1.25
Paris (Eiffel Tower) (France)	1456		206	5
Pecs (Hungary)	1465		204.8	1.25
Bournemouth	1474		203.5	1
Plymouth	1474		203.5	0.3
International Common Wave	1492		201.1	0.2
International Common Wave	1500		200	0.25
Liepàja (Latvia)	1737		173	0.1

The Wireless World
THE PRACTICAL RADIO JOURNAL
25th Year of Publication

No. 828. FRIDAY, JULY 12TH, 1935. VOL. XXXVII. No. 2.

Proprietors : ILIFFE & SONS LTD.

Editor :
HUGH S. POCOCK.

Editorial,
Advertising and Publishing Offices :
DORSET HOUSE, STAMFORD STREET,
LONDON, S.E.1.

Telephone: Hop 3333 (50 lines).
Telegrams: "Ethaworld, Sedist, London."

COVENTRY : Hertford Street.
Telegrams: "Autocar, Coventry." Telephone: 5210 Coventry.

BIRMINGHAM :
Guildhall Buildings, Navigation Street, 2.
Telegrams: "Autopress, Birmingham." Telephone: 2971 Midland (4 lines).

MANCHESTER : 260, Deansgate, 3.
Telegrams: "Iliffe, Manchester." Telephone: Blackfriars 4412 (4 lines).

GLASGOW : 26B, Renfield Street, C.2.
Telegrams: "Iliffe, Glasgow." Telephone: Central 4857.

PUBLISHED WEEKLY. ENTERED AS SECOND CLASS MATTER AT NEW YORK, N.Y.

Subscription Rates :
Home, £1 1s. 8d. ; Canada, £1 1s. 8d. ; other countries, £1 3s. 10d. per annum.

As many of the circuits and apparatus described in these pages are covered by patents, readers are advised, before making use of them, to satisfy themselves that they would not be infringing patents.

CONTENTS

	Page
Editorial Comment	25
Choosing the Intermediate Frequency	26
Measuring the Ultra Shorts	28
Unbiased	30
Current Topics	31
Input Resistance of a Diode or Triode Detector	32
Electrical Research During the Reign of George II	34
High Fidelity and Background Noise	35
Random Radiations	36
Cossor Model 364	38
Listeners' Guide for the Week	40
Hints and Tips	42
Broadcast Brevities	43
Letters to the Editor	44
New Apparatus Reviewed	45
Foundations of Wireless—XXVII	46

EDITORIAL COMMENT

Extending Outside Broadcasts

More Scope for the B.B.C.

THE outside broadcasts, or O.B.s, conducted by the B.B.C. must certainly be given first place amongst the programme material from the point of view of public interest. This is not merely because these transmissions are generally events which have a national appeal ; it is also because they are exceedingly well done. But, even if they should be trivial in themselves, they would take on a special glamour for the listener when he knows that they are first-hand impressions in which he is, so to speak, participating.

There are, of course, plenty of subjects for such items in the programmes where the material is easily available in this country, but events which take place abroad provide a still greater variation of subject which makes them particularly welcome.

We believe that the B.B.C. should make efforts to extend O.B.s to include narratives of events abroad to a much greater degree than at present. We have from time to time had some excellent examples of O.B.s from overseas conducted by the B.B.C., but they have been far too infrequent and have mostly been concerned with specialised subjects.

Could we not have broadcasts of a more intimate character which would describe the everyday life of other nationals ?

Empire broadcasts recording home events are popular in the Dominions and Colonies. Why not give us some first-hand accounts of life from their end and from foreign countries ?

It may be suggested that the cost of such transmissions would be a deterrent, but it must be remembered that the subject matter for the programmes is already available and no large costs of production have to be met, and this consideration should balance the cost of hiring telephone lines for the purpose.

If America can find it worth while to have agents in Europe who are prepared to install microphones in the crater of Vesuvius for the sake of local "colour," surely it is worth while for the B.B.C. to follow suit with more worth-while subject matter which need not be so spectacular, but which would be of far greater instructional value.

The Ullswater Committee

Finance the Real Problem

THE Government Committee appointed under the chairmanship of Lord Ullswater to enquire into the future of the B.B.C. on the expiration of the present Charter is still at work, and no statements as to its possible findings should be accepted as anything but speculation, since quite obviously the members of the Committee are debarred from discussing their task until after their report has been presented to the Government.

Nevertheless, it is permissible to speculate as to what the Committee may recommend, and it seems highly probable that the question of B.B.C. finance will figure more prominently in the recommendations than any proposals for tampering with the B.B.C.'s constitution.

Few people would question the need of the B.B.C. for more money for programmes and development. Hours of broadcast have been extended and new requirements, such as Empire broadcasting and Television, are constantly making fresh demands on the Corporation's finances.

Choosing the Intermediate Frequency

The Pros and Cons of Different Frequencies

By W. T. COCKING

THE author has shown in a previous article how poor a compromise a fixed-selectivity receiver is in the matter of quality when both local-station and distant reception is wanted. In the present article it is explained how the choice of value of the intermediate frequency stages of a superheterodyne is linked with the question of providing for variable selectivity

IF the number of sets incorporating it is any criterion, the superheterodyne principle has established itself as the only one capable of meeting the exacting requirements of modern broadcasting conditions. Although no one will deny that it is possible to build a straight set which possesses the requisite sensitivity and selectivity for long-distance reception, the problems of obtaining accurate ganging and of maintaining stability are likely to prove serious, and the resulting set is by no means simple. This is especially the case when variable selectivity is needed. It is by no means difficult to include this in the fixed-frequency IF amplifier of a superheterodyne,[1] but the difficulties attendant upon fitting it to a straight set would seem prohibitive.

If we decide, as we must, that the superheterodyne best meets the requirements of general reception, as providing the simplest way of obtaining high sensitivity and selectivity, our decision is confirmed by the comparative ease with which variable selectivity can be included, for this has such a far-reaching effect upon the quality of reproduction that it is soon likely to be deemed an essential. The superheterodyne, therefore, proves to be the best type of receiver not merely for distant reception but for general use where a very high standard of quality is demanded in local reception together with high selectivity when distant stations are required.

Now broadcast reception may be divided into three distinct categories: local, where the receiver is situated within the service area of the wanted transmitter; medium distance, where reception is wanted from high-power stations which are several hundred miles away, but which give a strong signal after dark; and long distance, where the signals are usually very weak and emanate from transmitters of low or high power many hundreds or thousands of miles away. The degrees of selectivity and sensitivity necessary rise as we go through these categories in order, and the quality of reproduction obtainable steadily deteriorates. The minimum degrees of selectivity and sensitivity needed are set by the demands of local reception and are quite low and easy to satisfy, while it is accordingly possible to obtain very high quality reproduction. The maximum degrees of selectivity and quality, however, are set by the weakest signal required and by the interference conditions, and the difficulties increase as the signal weakens and the interference increases.

Whatever the frequency adopted for the IF amplifier, it is not difficult to obtain all the amplification which can be used. A limit is set to the useful amplification by the noise generated in the receiver and this is of several kinds. Valves contribute their quota of hiss, but the limit is really set by thermal agitation in the conductors forming the first circuit, and this applies whether the set be straight or superheterodyne. For a maximum ratio of signal to internal noise the input circuit should be efficient and resonant to the incoming signal. Given this condition and a correct choice of the first valve, the frequency at which amplification is carried out in unimportant. In practice, of course, one would tend to choose a low intermediate frequency rather than a high, since fewer stages are then needed to achieve the amplification with stability.

Turning now to selectivity, provided that the efficiency of the tuned circuits is the same, the lower their operating frequency the greater is their power of discriminating against unwanted stations, so that here, again, a low frequency would seem advisable. For a given degree of selection before the frequency-changer, however, a low intermediate frequency is far more likely to lead to trouble from second-channel interference than a high one. We cannot, therefore, arbitrarily choose any frequency, and the pros and cons must be carefully weighed bearing in mind the purpose for which the receiver is intended; that is, whether it is to be used for local, medium, or long-distance reception.

The broadcasting bands can be taken accurately enough as 150-300 kc/s for the long waves and 550-1,500 kc/s for the medium, and for all ordinary purposes these must be taken as prohibited bands within which the intermediate frequency cannot lie. We have, therefore, three possibilities for the intermediate frequency; it can be a low frequency of the order of 110 kc/s, it can be a medium frequency of about 465 kc/s between the two wavebands, or it can be a high frequency of some 1,600 kc/s. We shall confine the discussion to these three frequencies, and the question of amplification need not be considered since it is quite possible to obtain any degree we may need at any of these frequencies.

The Demands of Selectivity

The question of selectivity is very complicated. Although it is simple enough to compare the selectivity of single circuits of the same efficiency at the different frequencies, this tells us only a small part of the story. It is usually possible to build more efficient circuits at a high frequency than at a low, so that this offsets the natural tendency of low frequency circuits to be more selective, while the necessity for tightly coupled band-pass circuits at a low frequency still further militates against it. Dielectric losses, however, assume serious proportions at a high fre-

[1] *The Wireless World*, July 5th, 1935.

Choosing the Intermediate Frequency—

quency and the measures necessary to combat them tend to increase cost.

It is, therefore, impossible to lay down hard and fast rules, and experience indicates that there is not a great deal to choose on the score of selectivity between 110 kc/s and 465 kc/s. Assuming that the same number of tuned circuits be used and the couplings adjusted for the same degree of modulation-frequency response at about 5,000 c/s, the selectivity can be of the same order, but the higher frequency demands rather better coils. The difference, however, is by no means great enough to rule out the use of a frequency of 465 kc/s even when very high selectivity is demanded.

The case is different, however, when we consider 1,600 kc/s, for it then proves impossible to increase the efficiency of the individual circuits sufficiently without the use of regeneration, and to obtain the same degree of selectivity many more circuits are necessary. It is generally accepted that for long-distance reception the response at 10 kc/s off-tune must not be more than one-thousandth of that at resonance. It is easy to achieve this with six tuned circuits at 110 kc/s, and not unduly difficult at 465 kc/s, but quite out of the question at 1,600 kc/s.

Turning now to second-channel interference, experience indicates that two signal-frequency tuned circuits give adequate protection with an intermediate frequency of 110 kc/s, except in cases where the interference is caused by a local transmitter; three circuits are then needed or a special rejection system. Over the band of 150-300 kc/s, second-channel interference can occur only from stations in the range 370-520 kc/s, and this is outside the broadcast bands. On the medium waveband, however, stations between 770 kc/s and 1,720 kc/s may cause interference, and the risk is serious because this is the major portion of the medium waveband.

If we turn to an intermediate frequency of 465 kc/s we gain considerably, for each signal-frequency circuit gives roughly the protection of two with the lower frequency. In addition, the number of broadcasting stations capable of causing second-channel interference is much less. On the long waveband only stations between 1,080 kc/s and 1,230 kc/s can cause trouble, and on the medium the second-channel range is 1,480 kc/s to 2,430 kc/s, of which only the 1,480-1,500 kc/s band coincides with a broadcast band.

When we turn to 1,600 kc/s, the second-channel band for the whole range of 150-1,500 kc/s is 3,350-4,700 kc/s, and interference of this kind from broadcasting stations is impossible. With such an intermediate frequency it is, in fact, possible to dispense with signal-frequency tuned circuits and to employ in their place a fixed filter. Ganging is then abolished, and as the full range can be covered in one sweep of the tuning condenser waveband switching is unnecessary. The single-span system of tuning thus offers considerable advantages over the more conventional superheterodyne.

The Final Choice

The chief characteristics of the different intermediate frequencies have been briefly outlined, and we are now in a position to make a choice, and this choice will naturally depend upon the use to which we wish to put the receiver. For a purely local receiver one frequency is as good as another, but the high frequency has the advantage of permitting single-span tuning, with all its simplification, to be used. More often than not, however, the straight set will be used, for neither selectivity nor sensitivity is important.

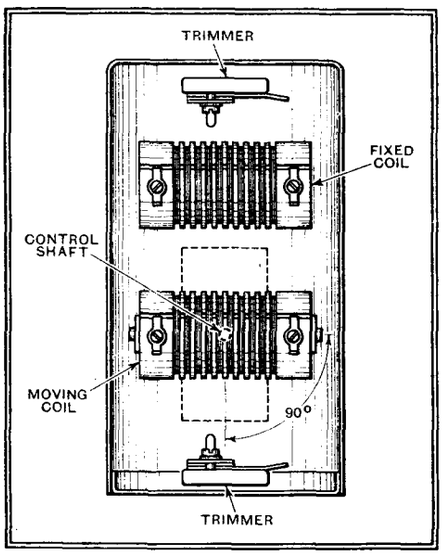

The principle of a variable-selectivity IF transformer is clearly shown in this skeleton drawing. The upper coil is fixed in position, but the lower can be rotated with respect to it by the control rod projecting through the screening can. Note that the trimmers are mounted at opposite ends of the screen to reduce unwanted capacity couplings.

For a very long-distance receiver used in a district remote from any powerful transmitter, a low intermediate frequency is best, for there is hardly any limit to the degree of selectivity which it is possible to achieve, and no more than two pre-selector circuits will be needed. If the set is to be used within a few miles of a broadcasting station, three, or even four, signal-frequency circuits will be needed to avoid all trouble from second-channel interference.

In general, a receiver is not used exclusively for one purpose, however. The local receiver must give occasional reception of the stronger Continental transmissions, and the long-distance receiver is sometimes tuned to the local. We have, therefore, to consider more than a single requirement, and we must ever bear in mind the important points of convenience and cost. With an intermediate frequency of 1,600 kc/s it is easy to secure more than adequate selectivity for local reception, and by means of regeneration it can be increased sufficiently to permit very good results being obtained from the stronger Continental transmissions. The degree of sensitivity required for such stations is not so high that background hiss is likely to prove important, so that there is no objection to the aperiodic aerial system of a single-span receiver. When account is taken of the simplicity of its tuning arrangements, moreover, this type of set will be seen to be ideal for these particular receiving conditions.

The next class of listener requires a set which will still be used largely for local reception, but which will be used to a much greater degree than before for moderate distance reception, and occasionally for long-distance reception. Here the single-span receiver is again suitable, but its adjacent channel selectivity is lower than that of a receiver with a lower intermediate frequency. The latter, however, must have a more complex tuning system if second-channel and kindred forms of interference are to be avoided. A definite ruling in this category is impossible, for it is on the border line, on either side of which one system seems definitely superior to the other. Too many factors are involved to be discussed here, and they are, moreover, factors which will vary greatly according to circumstances.

Extreme Sensitivity

When we turn to the more sensitive type of set, however, which, although it must be capable of high-quality local reception, is intended not only for medium but for long-distance reception, we shall find that signal-frequency tuning and a moderate or low intermediate frequency become necessary. The sensitivity of such a receiver must be so high that internally generated noise becomes of importance, and in order to make the limiting factor the circuit noise rather than the valve hiss, the signal applied to the first valve must be as large as possible, and this calls for a tuned signal-frequency circuit rather than the aperiodic circuit of a single-span receiver. If we use signal-frequency tuned circuits, waveband switching becomes necessary, so that there is no reason, save that of second-channel interference, against using a moderate or low intermediate frequency. Adequate selectivity for this type of receiver cannot be obtained at 1,600 kc/s at the present time, so that this is an additional reason for reverting to the standard type of superheterodyne in cases where both sensitivity and selectivity must be very high. We have, therefore, to choose only between 110 kc/s and 465 kc/s for the intermediate frequency. A receiver of this nature should be fitted with variable selectivity if it is to be capable of giving the best performance as regards both distant and local transmissions, and it has already been pointed out that this is more readily achieved at 465 kc/s than at 110 kc/s. When we take into account the smaller degree of second-channel interference with the higher intermediate frequency, it is clear that there is ample justification for its use.

Measuring the Ultra Shorts

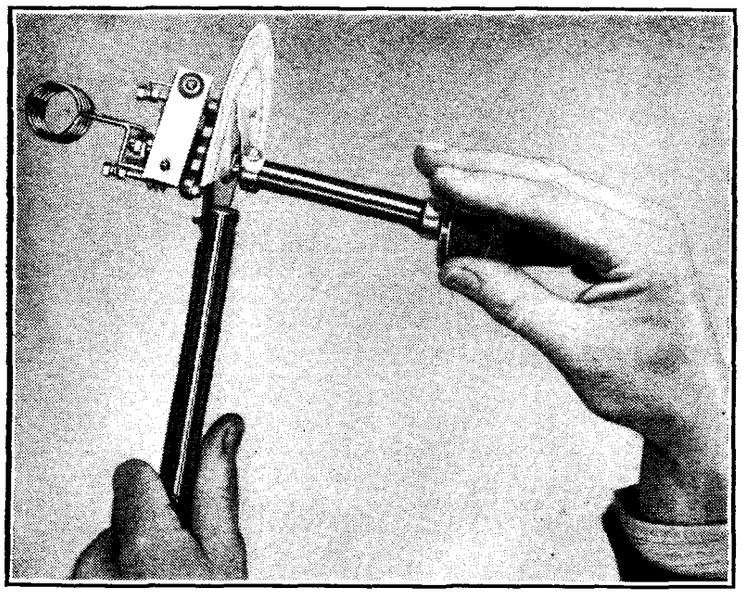

This illustration shows a handy form of absorption wavemeter with directly calibrated scale covering a range of 4.5 to 7 metres.

A Simple Absorption Wavemeter and its Calibration

By H. B. DENT

THE paucity of signals of known frequency on the ultra-short waveband is a handicap to testing a newly constructed receiver. It is suggested that a simple signal generator be used such as that described in this article. An absorption wavemeter is also described with notes on how it can be calibrated.

THE constructor of a short-wave receiver has no difficulty in testing the results of his handiwork, for there are plenty of signals to be heard from twelve metres upwards; silence in the headphones or loud speaker is indicative of something amiss with the set, and steps can be taken to trace the cause to its lair. On the ultra-short waveband, i.e., below ten metres, signals are few and far between, for, apart from the amateur, the only other occupants of this portion of the radio spectrum are the experimental television transmitters.

Having therefore completed an ultra-short-wave receiver for the five-metre band, one is faced with the problem of devising ways and means of testing it. Of course, listening in at intervals on what one fondly assumes to be five metres, may bring its reward in the form of an amateur testing his transmitter or working with another of the same order. But it is a tedious business waiting for the elusive signal, and even somewhat exasperating if one particularly wishes to get a set working at the eleventh hour to take part in one of the special five-metre tests occasionally organised by amateur experimenters at the week-ends.

The only alternative to groping in the dark is to produce a home-grown signal, and the simple form of oscillator in Fig. 1 will suffice, for it need not even be modulated. It is, in fact, nothing more than an oscillating detector stage, though to be of any use it must be calibrated, if only approximately, for otherwise work on the receiver will be wasted effort, for even with the local signal one is no nearer to knowing where five-metres tunes in than without it.

The calibration does not present much difficulty, and can conveniently be effected by means of Lecher wires. These consist of two parallel wires erected about four or five feet above the ground, spaced 3in. apart by insulating bars and coupled to an oscillator as aforementioned, but fitted with a power valve. They are joined by a single-turn coil at the oscillator end but open at the far end. These will have to be erected in the garden, for a span of about 25 feet is needed to give a measurement at seven metres. With these wires coupled to an oscillator, standing waves are set up having current antinodes, i.e., points of maximum current, at distances equal to a half wavelength.

It only remains to devise some means of determining these current maxima to obtain an accurate measurement of the wavelength, as the distance between them can be scaled off with a metre rule. The simplest indicator is a small low-consumption flash lamp bulb with short wires soldered to the two contacts and bridged across the wires. If this is moved along the bulb will light at each half-wave current antinode.

The first point will appear a half wavelength from the coupling point, but this distance is not always reliable, and it is advisable to ignore it and search for the next. The first point should be marked before moving the lamp bridge, as from this point to the next current antinode, measured in metres, will be exactly half the wavelength at which the valve is oscillating. On a 25-foot pair of wires wavelengths up to seven metres can be measured.

Whilst Lecher wires serve their purpose as a calibrator, a more convenient wavemeter is necessary for future use, and this might well take the form of an absorption meter calibrated from the Lecher wires. If a milliammeter is inserted in the HT feed to the oscillator valve, it will kick up when the wavemeter is brought near to its coil and tuned to resonance. The weakest coupling that just moves the meter needle should be used, as very tight coupling will give false results.

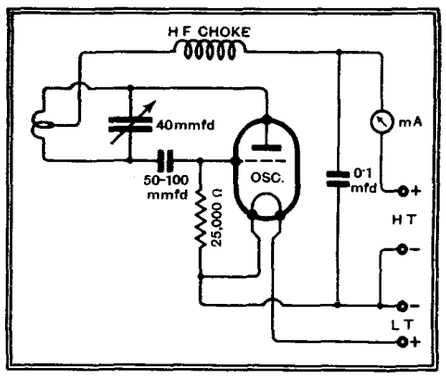

Fig. 1.—Simple ultra-short-wave test oscillator circuit; it could be used to energise Lecher wires for wavelength measurements. A two-turn coil, 2in. in diameter, is used.

A wavemeter for this band can be constructed from an Eddystone 25 mmfds. Microdenser, a coil of five turns spaced in one inch, and a small parallel fixed condenser of about ten to twelve mmfds. Eddystone make a suitable component. These can be assembled on a small square of ebonite and mounted on a long handle, as shown in the illustration. By fitting a parallel fixed condenser, a more open scale is obtained covering just that part of the band needed.

Calibrating

With the values given the range of the meter will be 4.5 metres to 7.0 metres approximately. A heavy gauge of wire is used for the coil, otherwise the slightest knock will upset the calibration. In the model shown the coil is ¾in. inside diameter, and wound with No. 12 SWG copper wire, 3/32in. diameter approximately.

Measuring the Ultra Shorts—

If an approximate calibration will suffice, the Lecher wire business can be dispensed with and a wavemeter roughly calibrated from the receiver, using as an indication of wavelength a resonant line consisting of two wires fixed to a long wood batten and spaced about 1½in. apart. These are joined at one end by a straight bridge but open at the other. They are a little less than a quarter wavelength long, so that the work can be effected indoors, since for a seven-metre reading the wires are about five feet long only. The curve in Fig. 2 gives the length required to resonate at wavelengths between 4.5 to 7 metres.

Resonant Line

When the resonant line is coupled to the grid coil of the detector and this stage is lightly oscillating, the oscillations will be suppressed at resonance. Leaving the receiver tuned to this position, the wavemeter is coupled to the coil and its condenser adjusted to suppress the oscillation as before. A click in the headphones indicates the resonant point. With super-regenerative sets the resonant point is indicated by a diminution in the "mush" level.

When making the adjustments with the resonant line care must be taken to ensure that the suppression of oscillations of the detector is due definitely to the absorbing effect of the line and not to any other cause, such as an HF choke or the like.

If the local signal oscillator has been built the wavelength can be adjusted by resonant line and the wavemeter calibrated from the oscillator, as described for the Lecher wire rig.

It has been mentioned that the local oscillator need not be modulated, for when a super-regenerative set is used and tuned to the oscillator the signal makes a hole in the "mush," a strong signal giving practically a silent background. To include modulation the scheme adopted in the test oscillator described in *The Wireless World* of May 10th last can be employed. This is reliable and gives a good note.

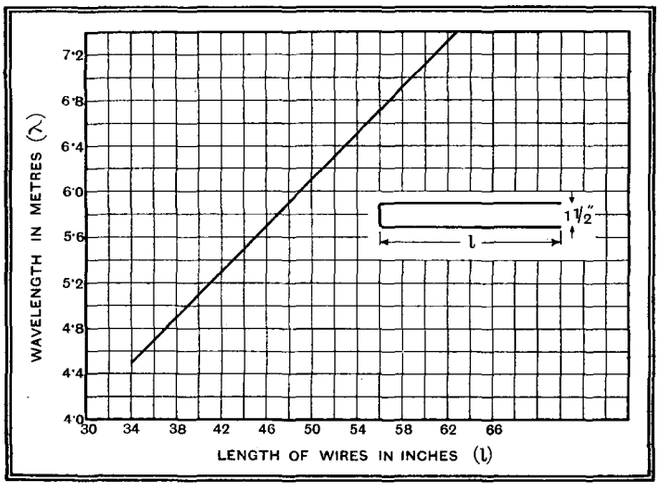

Fig. 2.—From this curve the length of a resonant line with wires spaced 1½in. can be obtained for wavelengths between 4.5 and 7 metres.

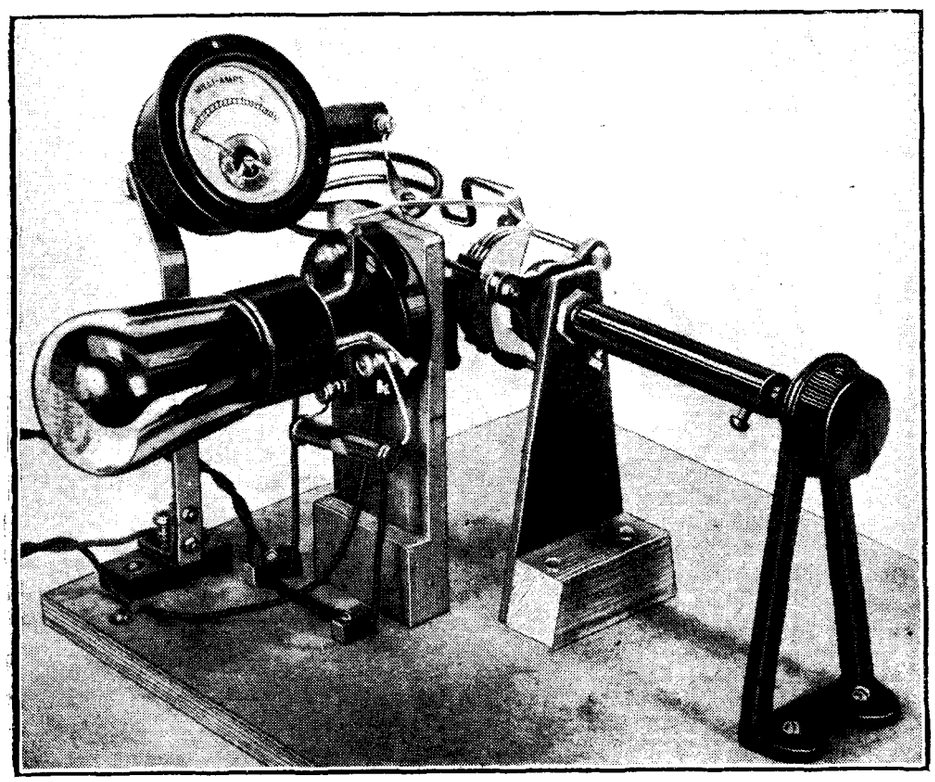

Ultra-short-wave oscillator used for Lecher wire measurements and for calibrating the absorption wavemeter shown in another illustration.

Through the Weather House*

Conducted Tour by a Practised Guide

IN this charming book Mr. Watson Watt has given shape and substance to our atmosphere by regarding it as a house of many storeys complete with floors, heating, electric light, h. and c. laid on, ventilation, lifts; and furnished with stair carpets, mirrors, and pictures.

It is a strange house in many ways, and its tenants are stranger still Thus the fourth-floor tenant who is interested in the manufacture of ozone has recently been discovered by detectives to have been living on the first floor all the time, and there is an unusually beautiful creature clad in filmy filagree who flits by night about the second-floor rooms. Though hydrogen might be expected to be abundant in the upper regions, recent inquirers can find no trace of this tenant, and it is believed that he has long ago made his escape through the roof of the house at No. 3, Sun Street.

The lifts, which transport hot air up and cold air down, are of two kinds. The ordinary lifts are reliable and are much used by birds and gliding enthusiasts; the express lifts are likely to get out of order and the flashing of fuses and the thunderous roar of machinery are often observed. Occasionally, a glider pilot of stout heart seeks adventure in such a runaway lift.

Telephony on the ground floor is chiefly carried on by a communicating system extending up to the 11th and 23rd floors and down again. On each of these floors we have a Hall of Mirrors, discovered by Heaviside and Appleton. Sometimes one hall is used, sometimes the other, depending on the wavelength on which we are called. But if the wavelength is too short it may never come down again. Like Alice it may escape through the looking-glass. But even on suitable wavelengths communication is often made difficult by irresponsible residents in the power house at the end of the street, who keep throwing stones at the roof of the weather house.

Mr. Watson Watt was a meteorologist of repute before he became a radio worker of renown. When we find that in addition he has the imaginative power of a first-class novelist it is hardly necessary to say that this book is one which should be read by everybody. It is a great achievement to have compressed the story of our atmosphere into 200 pages of entertainment.

R. T. B.

* "Through the Weather House." By R. A. Watson Watt, Pp. 192 (1935), 7/6 net. (Peter Davies, Ltd., 30, Henrietta Street, London, W.C.2.)

UNBIASED

By FREE GRID

Stereoscopic Television

THE latest television achievement is true stereoscopy, which has, I see, been accomplished experimentally by a German firm.

Most people are aware of the principles of stereoscopy, in which two photographs are taken with a special twin-lens camera or two cameras side by side. When the two photographs are stuck in the stereoscope a partition between the lenses causes each eye to see only its appropriate photograph.

Numerous attempts have been made to adapt the principle to the cinema and no doubt perfect results could be obtained if the audience were limited to one individual sitting in the middle of the cinema theatre, with one eye on either

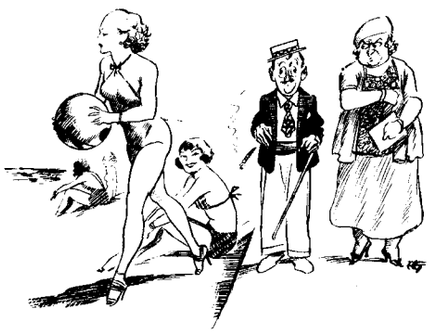

"Preventing one eye from seeing what the other is looking at."

side of a vertical partition running from the junction between the two photos on the screen. Various attempts have been made to get over the difficulty of preventing one eye seeing what the other eye is looking at, but so far nothing has appeared in the local hothouses of this or any other country so far as I am aware.

The inventor from the Fatherland has got over the difficulty by sending out two entirely separate television "frames" side by side in adjacent channels—a perfectly simple matter, for there are bags of room round about the five-metre region. Two entirely separate receivers and scanning impedimenta are used, the two cathode-ray tubes being arranged side by side behind a sort of hood, similar to that of the machine on the average seaside pier, into which you stick your head.

The results are obviously as perfect as the still-life stereoscopic photographs of very much overdressed Brighton bathing belles which so delighted our grandfathers. The only snag, so far as I can see, is that people would object to spending the evening peering into the eyepiece gadget. It might, however, be useful for hospital "eyephone" television which I suggested some time ago.

There is, of course, a well-known alternative scheme for cinema stereoscopy which was first put forward many years ago. In this arrangement each member of the audience is required to wear special spectacles using different coloured eyepieces. There is no reason, of course, why a similar scheme should not be adopted in connection with television, and personally I think it would be preferable to the hooded arrangement as with spectacles you could at least lean back in comfort in an armchair.

Mid-channel Telephony

I AM pleased that the powers-that-be have taken notice of my recent complaint about the absurdity of the fact that when crossing the Channel you are completely cut off from all telephonic communication with the shore a few miles away, whereas, on certain trans-Atlantic liners, wrong numbers to suit all tastes were continuously on tap.

Coming across from the Continent the other day I was gratified to find that the boat was fitted with a public call office, but my gratification was tempered by sorrow that the ship was not a British one.

Not that I was altogether surprised; it is a great wonder to me that British cross-Channel steamers have even wireless telegraphy fitted.

It cost me the equivalent of only two shillings to converse with Mrs. Free Grid who, by the oversight of a porter, had accidentally got left behind on an alien shore. Words failed me completely, however, when my subsequent request for a London number was met with a polite refusal. It appeared from subsequent explanations that the British Post Office are not sufficiently enterprising to provide a special wireless station to link up with the mid-Channel telephony service, and it was explained to me that if I wanted to communicate with London I should have to pay for getting myself connected up by wireless to the Continent and thence by cable, even though Dover was only a few hundred yards' distant. My suggestion that the boat should pretend to be a trans-Atlantic liner and call Rugby was not favourably received.

Even if we haven't the gumption to fit our own cross-Channel boats with a public call office, surely we could at least offer facilities to foreign steamers. And how long, may I ask, are cross-Channel aeroplane passengers to be similarly deprived of the opportunity of ringing up their bookmakers?

Interesting Age

WOMEN are strange creatures and at the best are fickle, false and hard to please, as one of my fellow tradesmen once remarked. I well remember that, many years ago, when I first began writing these notes, my post-bag used to be bulging every morning with correspondence from women of all ages and of all stations, ranging from Bond Street to Bow Road.

About eighty per cent. of my correspondents begged me to send them a photograph of myself or to publish one in my weekly pages, for at that time my classic features had not appeared in this journal. Their importunity wore down my resistance, and finally I reluctantly agreed to my features appearing in the various sketches which adorn my contribution each week. Immediately this was done the letters of lovelorn adulation from my female charmers ceased abruptly; like a child with a new and long-desired toy they had quickly tired of it when they finally got it.

After this I received very few letters from female admirers, although one or two faithful souls still stuck to me; one in particular, the wife of a naval officer, was a regular correspondent for some considerable time, but even she has dropped out now, and I can only suppose that her husband discovered our correspondence.

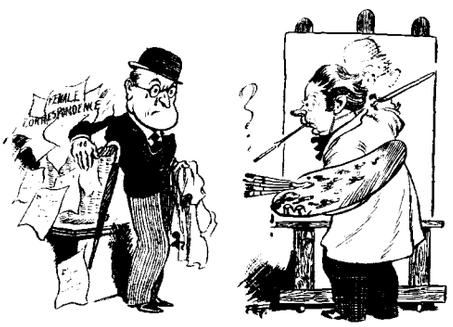

"Wore down my resistance."

Latterly, however, a slight trickle of female correspondence has recommenced, and the burden of their song is a request for me to publish photographs of the little Grid Leaks, "more especially the male ones who are of an interesting age." Now it is the last remark which puzzles me, and upon which I seek assistance. What on earth is meant by "an interesting age"? Interesting to whom? I can assure readers from bitter experience that none of them has so far proved particularly interesting to me, although they have, at times, been a confounded nuisance. Perhaps some student of female psychology will come to my aid with an explanation of this strange demand, for I confess that it has got me beaten to a frazzle.

Current Topics

Events of the Week in Brief Review

Free Licences for German Youths

FREE radio licences are now issued to Hitler Youth Organisations for sets operated in club-rooms.

Heilsberg Stronger

THE Heilsberg transmitter is about to resume operations with a new anti-fading aerial. The power has been raised from 60 to 100 kilowatts.

Nearly Two Million

REGISTERED listeners in France up to May 1st last numbered 1,957,194. The Paris region heads the list with 871,032.

Announcers' Competition

HERR HADAMOWSKI, the director-general of German broadcasting, was asked to give an official title to the Prospective Announcers' Contest. He chose "Rundfunksprecherwettbewerbsbezirksausscheidungskampf." Yet there was a large entry.

Nearly three hundred persons applied last week for a vacancy on the announcing staff of Radio Normandie.

World Broadcasting Conference

WE understand that a definite move was made at the annual meeting of the International Broadcasting Union at Warsaw towards extending its scope over the whole world. Arrangements are being made to hold a world conference of broadcasting organisations next spring, probably in Paris.

This widened outlook of the U.I.R. must be accounted for partly by the increasing importance of short-wave broadcasting and the extension of inter-Continental programme exchanges.

Tour de France

A NEW radio reporting car is being used in connection with the famous cycling event, the "Tour de France." The car, which is owned by the evening journal, *L'Intransigeant*, contains two compartments, the one in front being the studio and the other containing the recording apparatus.

A railed platform on the roof is used as a vantage point by the commentators. Commentaries are recorded on discs or can be passed direct to the control room for simultaneous broadcast.

Broadcast Relays Condemned

DENMARK is not enthusiastic in regard to wireless relay services. At the recent national meeting of the Association of Electrical Manufacturers the Chairman indicated that the Association would unite with the radio industry and television companies to oppose radio distribution systems. It had been found, he said, that wireless relay services were a source of inconvenience to the authorities.

A Danish Profit

AT least 164 out of every thousand inhabitants of Denmark have wireless receivers, according to the latest report of the Danish broadcasting organisation, which discloses a net profit of more than one million kroner during the season 1934/5, as compared with three-quarters of a million kroner for the previous year. The total number of Danish listeners is 583,000.

Wireless Opportunities in the R.A.F.

TRADESMEN are required for service in the R.A.F. in a civilian capacity for instruction work in fitting, metal rigging, armaments, and wireless.

The electrical and wireless school at Cranwell will have to handle a greatly increased entry of wireless operators. Civilian instructors are accordingly invited to apply for these appointments to the Commanding Officer, Royal Air Force Reception Depot, West Drayton, Middlesex.

Wireless instructors must be capable of lecturing in applied radio and electrical theory and of demonstrating in a radio and electrical laboratory. The commencing rate of pay for a radio instructor is £4 a week inclusive, which may be increased to £4 5s. after a short period of satisfactory service. In addition instructors of morse capable of working at 25 words a minute, semaphore at 15 words a minute, and lamps at 12 words a minute, are also required.

5-Metre Field Day

AS announced last week the Golders Green and Hendon Radio Society will hold a field day on Sunday next, July 14th, meeting at 9.30 a.m. outside the Old Mill House Tea Rooms on the Berkhamsted-King's Langley road. If the weather is favourable the transmitter, G5CD (wavelength, 5.2 metres), will be located near Ivinghoe Beacon. Particulars can be obtained from Mr. A. G. Griffith, assistant hon. secretary, "Hornbeams," Priory Drive, Stanmore, Middlesex. Telephone: Stanmore 373.

5-METRE SIGNALS AT 207 MILES

IT is now disclosed that 'phone and I.C.W. signals transmitted by Mr. Douglas Walters (G5CV) from the top of Snowdon last week were heard by Mr. A. J. Hall (G2NU), near Romford, Essex. The distance covered was 207 miles. The report checks with the transmission log.

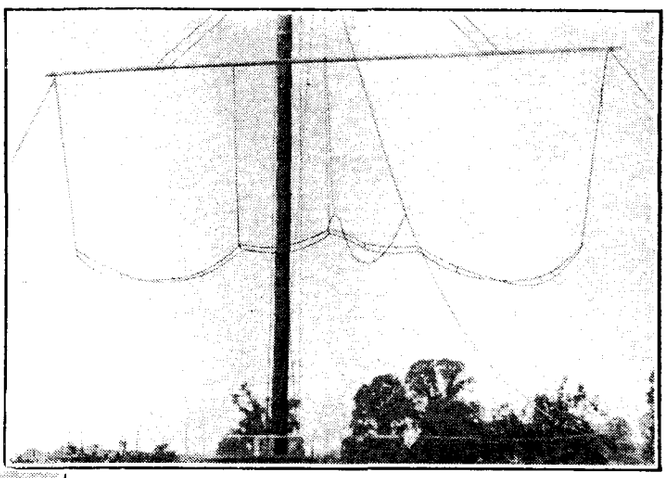

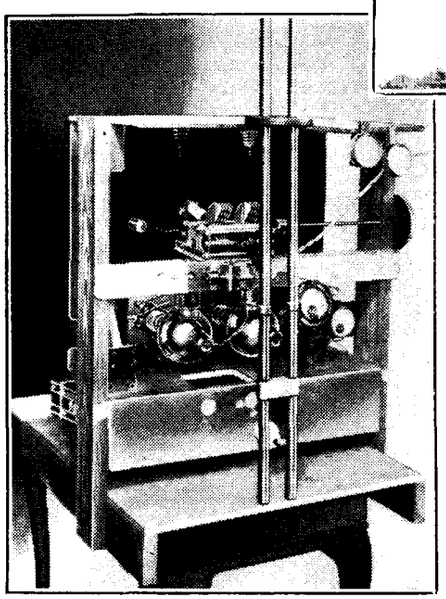

The aerial at Stoke Poges (G6CJ) employs two rows of four dipoles each, one above the other. On the left is G6CJ's transmitter — comprising two 852 valves in push-pull tuned-plate tuned-grid.

The first long distance report came from Mr. F. Charman (G6CJ), of Stoke Poges (175 miles), who picked up I.C.W. signals over a period of several hours on both Saturday and Sunday (June 29th and 30th). I.C.W. signals were also received by Mr. J. Walker (G5JU) on a high hill near Bristol (140 miles away).

Mr. F. Charman's receiver was a superhet., using separate oscillator, 3 IF stages on about 4 m/cs., and a second detector operating into the 'phones.

The aerial system employed two rows of four dipoles each, one above the other.

Modulated I.C.W. signals from Snowdon (writes Mr. Charman) were first discovered about 11.30 p.m. on June 29th, but were well below the background noise, and it was some time before the call sign was identified. Signals were watched till 1.30 a.m., when G5CV closed down. They were held again at 9.30 a.m., when a readable signal was received for a few minutes, and were held until 11 a.m. Mr. H. L. O'Heffernan (G5BY) has disputed the suggestion in our last issue that G5CV's achievement constitutes a record, in view of his own 200-mile transmission from Snowdon in 1933.

Input Resistance of a Diode or Triode Detector

Some Recent Investigations

THE loading effect of any type of detector has a considerable influence on the behaviour of the receiver with regard to both sensitivity and selectivity. This article deals with the quantitative estimation of detector input resistance (which determines the loading effect). The problem is complicated by the fact that actual resistance is largely dependent on input voltage.

ANY two-terminal detector, whether of thermionic or contact (e.g., copper-oxide) type, consumes electrical power when an alternating electro-motive force is applied to it. From this point of view, the detector and its associated load-resistance R, and by-pass condenser C, as in Fig. 1a, can be considered as equivalent to a resistance R*e*, as in Fig. 1b. For design purposes, it is desirable to know the magnitude of the equivalent effective input-resistance R*e* and the way this magnitude depends on the characteristic of the detector, the amplitude of operation, and the magnitude of the load-resistance.

A number of theoretical discussions of this subject have already been published, but most of these have been concerned with the idealised rectification-characteristic shown in Fig. 2a, it being suggested that for large amplitudes of operation the curvature which, in fact, is invariably associated with the foot of the characteristic, as in Fig. 2b, is unimportant compared with the substantially rectilinear part of the whole characteristic. There is, however, a fallacy in this assumption, as will be immediately apparent from the diagrammatic representation of the actual rectification-process shown in Fig. 3. In nearly all practical cases, where the load

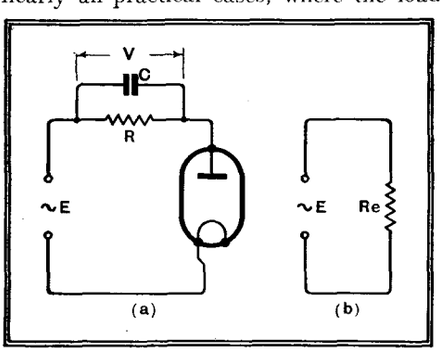

Fig. 1.—In diagram (*a*) E = RMS value of input voltage. V = direct component of rectified output voltage. In the equivalent circuit (*b*) R*e* = effective value of input (radio-frequency) resistance.

resistance R is relatively large, such radio-frequency conduction as occurs will be determined almost entirely by the curved foot of the characteristic, and conclusions drawn from a consideration of the idealised straight-line characteristic may be unreliable. Fortunately, this fact has been realised by the authors of the more recent publications on this subject, who have assumed, for the characteristic, forms more in accord with actuality.

One fact which has been firmly established, both theoretically and experimentally, is that in any efficient rectifying arrangement—i.e., one in which the rectifier passes practically zero current in one direction, and in which the load circuit is suitably designed—the effective input-resistance R*e* approaches in value half the magnitude of the DC load-resistance, i.e., R/2, as the input-voltage amplitude is increased. At the same time, the output voltage V tends to equality with $E\sqrt{2}$, i.e., to the peak value of the input-voltage. Thus we have as a limit-

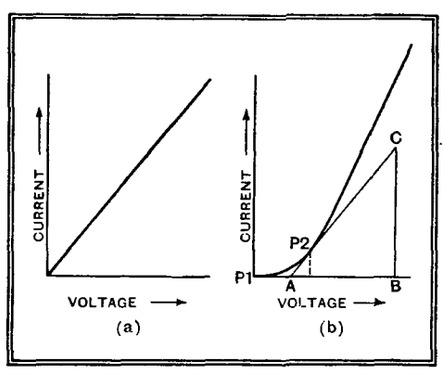

Fig. 2.—The ideal rectifier characteristic would be straight, as in dia. (*a*); in practice, its foot is always curved (dia. (*b*)).

ing condition for efficient rectification at large amplitudes:—

$$Re = \frac{R}{2}$$

$$\text{and } \sqrt{2 \times E} = V$$

$$\text{or} \quad 2E^2 = V^2$$

These results are fairly widely known, but it is possible that their dynamic significance is not so generally appreciated. Combining the two simple equations by division gives

$$\frac{2E^2}{Re} = \frac{2V^2}{R}$$

$$\text{or} \quad \frac{E^2}{Re} = \frac{V^2}{R}$$

of which the dynamic significance is immediately apparent, i.e., the input radio-frequency power E^2/Re is wholly converted into the output direct-current power V^2/R. From the general character of this result it may be inferred that *any* rectifying arrangement, whatever the precise form of its characteristic, will have an input resistance which tends to equality with half the DC load-resistance, if it is efficient in the above sense, i.e., if the output voltage tends to equality with the peak value of the input-voltage. (It is here assumed that the input-power is very approximately given by E^2/Re, i.e., that there are no very significant reactive components of input current.)

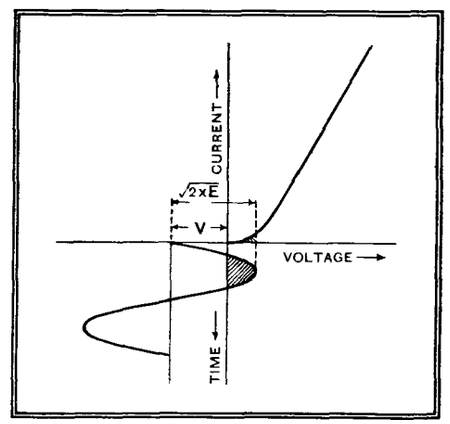

Fig. 3. Showing the significance of the curved foot of the rectifier characteristic.

Though it is useful to have this general rule it is still necessary to know how the input-resistance approaches this limit, as a function of the various variable elements involved, more particularly the amplitude of operation. There have been two comparatively recent experimental investigations in this field, with results that appear to be directly contradictory to each other. The curves in Figs. 4 and 5 are based respectively on the results given by E. Severini in the Italian Journal *Alta Frequenza* (Oct., 1933), and by J. Marique in the issue of *L'Onde Electrique* for Nov.,

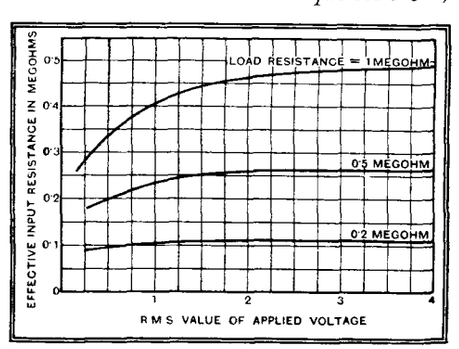

Fig. 4.—Measured values of effective input resistance of a grid-circuit rectifier.

Input Resistance of a Diode or Triode Detector—

1934. In each case R*e* tends towards the limiting value R/2, but in the one case it decreases from a much higher value towards this limit, and in the other it rises from a somewhat lower value.

Theoretical Analysis

The apparent inconsistency can, however, be resolved on theoretical grounds. If the initial grid-voltage corresponds to a point such as that marked P1 in Fig. 2b,

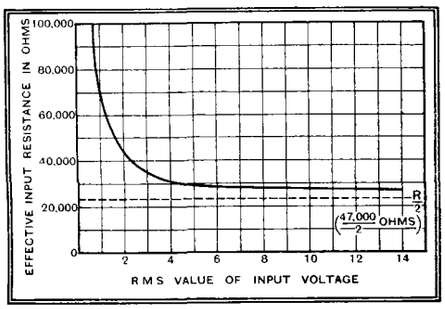

Fig. 5.—Measured values of effective input resistance of diode rectifier.

then a theoretical analysis shows that the input-resistance R*e* *decreases* towards the limit R/2 as E increases. The curve of Fig. 6, for example, based on data calculated by S. E. A. Landale[1] illustrates this behaviour, and serves also to give some idea of the rate at which this limit is approached in a representative case. If, on the other hand, the initial grid-bias corresponds to a point such as P2 in Fig. 2b, then it can be shown that the initial value of the input-resistance, corresponding to zero input-voltage, will be the slope-resistance of the rectifier-characteristic at the initial point, i.e., AB/BC in Fig. 2b. This slope-resistance may clearly have any value from several megohms down to a few tens of thousands of ohms, depending on the location of the initial working point, but under most practical conditions it will be of the order of a hundred thousand ohms or so. Since this initial slope-resistance may thus be greater or less than R/2, it is clear that R*e* may in practice approach the limiting value R/2 from either direction. In the case of Marique's measurements, for example, the load resistance R/2 was rather unusually small (47,000 ohms), and it is probable that the initial slope-resistance of the characteristic exceeded this value. In the Italian measurements, on the other hand, it may be inferred that the initial slope-resistances involved were somewhat lower than R/2. Unfortunately, neither paper gives sufficient data to permit of an exact confirmation of this explanation of the contrary initial slopes of the curves of figures 4 and 5, but it is a reasonably probable and sufficient explanation of the observed variations. In either case, it is shown that the limiting value R/2 is approached fairly rapidly as a function of input-amplitude, and if the latter exceeds four or five volts the limiting value can safely

[1] S. E. A. Landale: "An Analysis of Triode Valve Rectification." *Proc. Camb. Phil. Soc.*, Oct., 1929.

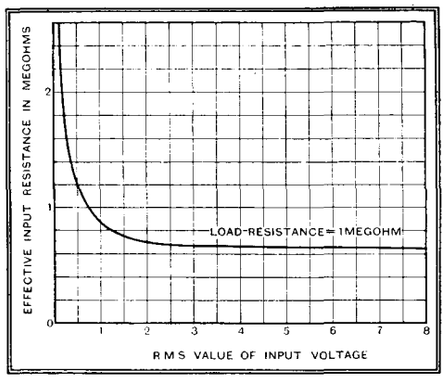

Fig. 6.—Calculated value of the effective input resistance of a rectifier with zero conductivity in one direction and "square-law" conductivity in the other.

be assumed for all practical design purposes.

It must, of course, be remembered that this input resistance is that corresponding to the radio-frequency power absorbed by the rectification process alone. In the case of grid-rectification in a triode valve there will, in general, be an additional small load, representable at a resistance in parallel with R*e*, arising from the coupling between grid and anode circuit through the grid-anode capacitance. In practice, therefore, the input-resistance may be found to be somewhat lower than the theoretical limiting value R/2, but this effect, with its consequent lowering of rectification-efficiency, can be minimised by providing a low impedance radio-frequency path in the anode-circuit.

Short-wave Broadcasting

THE recent thundery tendencies have made reliable short-wave reception a somewhat difficult matter, as atmospherics have been unusually troublesome, even on wavelengths below 20 metres.

As a general rule, however, it has been only the 49-metre band which has become really uncomfortable, and stations on shorter wavelengths have been sufficiently strong to come through the static background quite well.

W2XAF on 31.48 metres must surely be the "star" American station at present. It is a pity that this station does not start up until 11.30 p.m., as he would certainly come over at excellent strength as early as 9 p.m. Recent important outside broadcasts from the States have been received *via* "XAF" with great reliability, with occasional bursts of quick fading as the only drawback.

JBH, Nazaki, Japan, on 20.6 metres, now appears to have come on the map as a regular broadcast station. His commercial telephony has been heard by short-wave listeners for quite a long time, but he is now putting out programmes with 20 kW., including a news bulletin in English. His regular time of operation is 2.30-3.30 p.m. B.S.T.

A Glasgow reader takes up the recent remarks, by another correspondent, on the subject of "switching on for a short-wave programme at a given time." This particular reader recalls schooldays, when sitting up late was discouraged (to put it mildly). He arranged a remote-control system from his bedside, and having first tuned in the receiver to W2XAF or W8XK, would retire ostensibly to bed and switch on at 11 p.m., or thereabouts.

The same reader has never quite lost the habit, and on more than one occasion recently has set his alarm clock for 3 a.m., switched on the set from the bedside, and listened to world's championship boxing matches and similar events.

The chief difficulty seems to be that of securing advance copies of short-wave programmes. The American stations give a résumé at the beginning of each week of the important events to be broadcast, but others are not so considerate.

In view of this, the chief charm of the short waves still seems to be the ability to tune in a station that one has never heard before, listen to an interminable programme, and finally have to switch off without having heard an announcement of any kind. Perhaps short-wave broadcasting will reform itself before long!

The writer would be very glad if readers would send him details of new and interesting stations that they hear, together with approximate wavelength and time. There are many unidentified stations still on his list.

MEGACYCLE.

A New McMichael Set

WITH the object of making McMichael receivers available to a wider section of the community a new superheterodyne, known as Model 235, has been introduced at the comparatively low figure of 12 guineas.

The new set is striking in appearance and the cabinet is constructed of inlaid walnut. The three-valve circuit comprises a triode-pentode frequency changer, HF pentode IF amplifier, and double-diode-pentode combined detector and output valve. AVC is, of course, included, and an interesting feature of the circuit is the inclusion of mains suppressors to minimise electrical interference troubles.

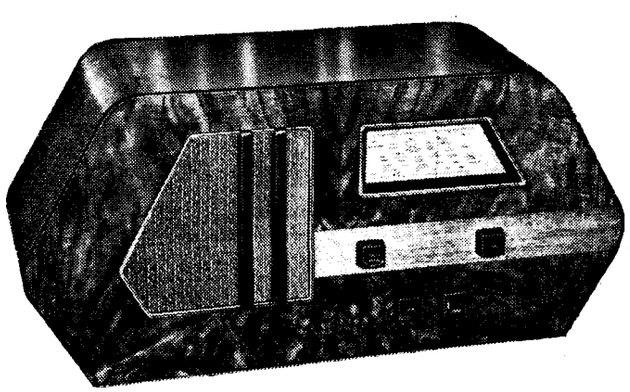

McMichael Model 235 superheterodyne.

Electrical Research During the Reign of George II.

Very Real Problems of 1745

WHEN the old hand at radio views one of those super-modern receivers capable of bringing in half the World's stations at loud-speaker strength with the turn of a single knob, how often we hear him remark : " Yes, but in the good old days of multiple tuners and magnetic-detectors, then wireless was really wireless ! " To cheer the old hands at radio a correspondent sends us the following extracts from an article which appeared in " The Gentleman's Magazine" of January, 1747, under the title, " Experiments on Electricity."

IN September, 1745 (runs the article), being in company with my ingenious friend Mr. Wilson and having a globe for making electrical experiments, he proposed one to determine the velocity wherewith the electric matter moves thro' bodies, by means of a wire 450 feet long, properly suspended, and two pieces of the downy part of a feather nearly equal in bulk and weight, which were laid on polished plates of brass adjoined to each end of the wire; from these when the rod of wire was electrified might be seen which feather was thrown off or repelled first from either plate. The event, after a great number of tryals, was, that the difference in point of time was scarce perceivable so that nothing with any accuracy could be determined by either of us for sometimes the farthest would seem to move the first and at other times that which was nearest.

We then proceeded to the firing spirit of wine warmed in a spoon, which we did at the farther end of the wire as well as the nearer; and both with equal facility; and the shock, snap, and flame, upon approaching the wire at either end with the finger, were apparently equal; and the effect was so great as, upon applying the spirit to the wire, to cause one unavoidably to throw part of the spirit out of the spoon, the arm being very much convulsed.

Velocity and Distance

In the following winter, at every favourable opportunity, I try'd to fire spirits, etc., by means of a short piece of wire 5 or 6 feet long, all the rest being as before; but to my great surprize, I never could produce an accumulation or effect, in any degree comparable to that we had before experienced; which, at first I attributed to the greater moisture or coldness of the air; but being satisfied to the contrary, I began to think that our former success was owing to the greater quantity of solid matter contained in the wire we then made use of. To satisfy myself in this, I suspended a smith's anville in silk cords, so as to communicate with the electrified globe; but the force of the electric matter contained therein, did not appear, upon touching it, to be greater than before. Hereupon, I imagined that the great velocity acquired by the motion of the electric matter from so great a distance might perhaps be the cause of it. To try this, I suspended 860 feet of the same wire, and in the same manner as before; with this I produced a greater effect than ever; but yet I cannot think that the effect of 860 feet was proportionably greater than that of 450 as the number is. But to be assured whether my fresh success was really owing to the enlarged length of the wire, or to some other circumstances, I disengaged the first piece of wire, which might be about 20 feet long, from all the rest, as I could easily and readily do so; and having made the experiment several times over, first with the whole length, then with one piece only, I constantly found that the effect of the whole length was vastly superior to that of one piece. I was then desirous to know, whether a greater quantity of electric matter, being accumulated in a larger quantity of solid matter, and moving with the same velocity, might not produce a greater effect; to determine this, I suspended the anville as before, which communicated with the farther end of the wire; but the effect was not sensibly different, whether the anville itself was touched, or that end of the wire the most remote from it; nor even whether the anville communicated with the wire or not. I afterwards enlarged the wire to 1,078 feet, but the effect was not sensibly greater than that of 860; however, I am certain it was not less. I have since try'd Mr. Wilson's experiment with 860 feet, with just the same success as before; however, I assured myself that there was no real difference in time of half a second. I have found that the force of 5 or 600 feet of wire is to all appearance as great as any.

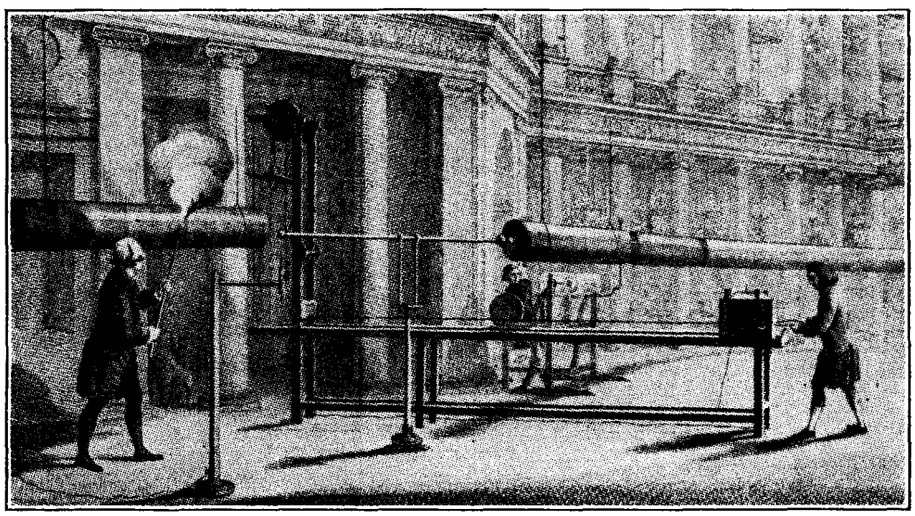

Mr. Wilson and his assistants engaged in an electrical experiment with two spark gaps in the Pantheon.

The following queries perhaps may not be improperly adjoined.

1. Does not the electric matter move at least thro' a greater space than 1,000 feet in a second of time, since it is sensible at the end of a wire 860 feet long apparently as soon as at the beginning?

2. Does not the electric matter move with an accelerated motion; since, if it moved with an equal one, as great an effect ought to be produced from a short wire as from a long one, if it be true that the effect is not increased by increasing the quantity of matter electrified?

3. Can its motion be, in practice, accelerated beyond a certain degree, since, if it could be increased ad infinitum, it would always follow, that the farther the wire was continued, the greater would be its velocity and effect at the end thereof; but it does not appear to be greater in a wire of 1,000 feet than in one of 6 or 800?

4. Does this happen, because the electric matter meets with any resistance from the bodies thro' which it passes, which, increasing as the velocity of the electric matter is increasing, till such times as the resistance becomes equal to the original moving force, causes the velocity after that to be continued equal, as would happen to a stone falling in the air? Or

5. Does it happen by a loss of the electric matter in passing through so great a distance into the air, and thereby lowering its original moving force or elasticity, as much as it gains by acceleration, in passing through that greater distance?

* * *

Such were the problems which perplexed our forefathers, who, it must be remembered, had no access to *The Wireless World* Information Department.

High Fidelity and Background Noise

By "CATHODE RAY"

Average Listeners Undergo Scientific Tests

IN asking "Why do listeners like *Boom?*"* I suggested, as one of the answers, that turning the tone control to "low" is a simpler way for the average (and, therefore, lazy) listener to reduce interfering noises than the process of filling in Post Office complaint forms—of which many people don't even know the existence.

Academic qualifications are not needed for finding out that background noise is ameliorated by cutting off the top notes—the uninformed knob-twister soon tumbles to it when left to himself and his knobs. All the same, some wise person has left it on record that "to measure is to know" (or similar pithy observation); a principle that underlies all scientific advance. It affords great amusement to a certain type of observer when a size 8 hat gravely announces the identical conclusions that the ordinary man in the street reached a long time ago. But the scientific investigation of many apparently obvious things has often been extremely fruitful. So there is no occasion to deride some of the recent work of the Bell Telephone Laboratories even if it fails to provide any of the sensational disclosures beloved of the lay journalist.

They have been finding out how much a restricted scale of frequencies—top note cutting, in other words—affects the interference due to "mush" or "hiss." Now, the way in which the learned scientist with his measuring instruments sometimes lays himself open to criticism from his "practical" brethren is that in his enthusiasm he may forget that the ultimate judge of what is wanted is not a voltmeter but the human ear. There are certain things that in our present state of knowledge seem incapable of being measured with inanimate apparatus.

The Human Element

In the famous experiments that the Bell people carried out, establishing beyond further argument how wide a scale of frequencies is needed to reproduce sounds faithfully, they employed a considerable number of human beings as their measuring instruments; cleverly using them in such a way as to exclude so far as possible the tiresome prejudices and wilfulnesses that make human observers so unreliable and then taking an average in order to cancel out unusual or extreme aural characteristics.

In this way they combine scientific method with direct observation in terms of the effect on the listener. In the work on noise interference they again adopt these methods, taking an average of the observations made by twenty people picked at random. As a preliminary precaution they ran a test on these people to find out the characteristics of their ears. These were found to differ fairly widely, but were considered to be representative of listeners in general.

The listening apparatus consisted of an amplifier and loud speaker system giving practically a perfect level response up to 7,500 cycles per second—something considerably better than the ordinary receiver of commerce, but not so good as the really high fidelity system the Bell have produced, level up to 15,000 or so. Into this (which was called "full band") could be switched filters giving a cut-off at 7,000, 5,000 or 3,500. The last of these is something like what one gets over the counter. A musical programme could be switched on and controlled in volume; and to avoid complications it was chosen for its unvaryingly *mf* character.

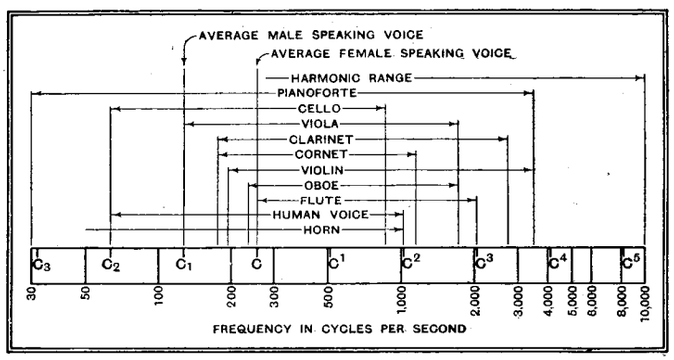

The gamut of audible frequencies, showing the fundamental range of musical instruments.

In addition there was the noise. This was provided by an amplifier of very high gain, introducing unavoidable valve hiss at strength. It is caused by the random circulation of electrons in the valve; and, unlike most other sources of noise that could be thought of, is uniformly distributed over the whole frequency band, so that if the filter cuts the band of accepted frequencies in half, the noise power likewise goes down to a half.

If that were all, there would be no need to pursue the matter farther; the point is that owing to the peculiarities of the human ear the reduction in loudness depends on which part of the frequency band is cut out. It also depends, to some unknown extent, on whatever other sounds—e.g., a broadcast programme—may happen to be heard at the same time. The strength of the noise injected in this way was under control and measured in decibels (db).

Threshold Noise Level

The first test, after the preliminary check-over of the human material, was to find the noise level that could just be detected by the listeners in a quiet room, twelve feet from the loud speaker, and with each of the filters switched on in turn. The figure varied with the different listeners, but I am quoting only the averages of the twenty. They appear in Column I of the table; first, the number of db *attenuation* that had to be introduced by the volume control to cut the noise down to the just-audible level. With the full frequency band available this is nearly 65 db, showing that the noise issuing from the speaker was exceedingly weak. Cutting down to 7,000 had very little effect; the difference, 0.1 db, is printed alongside. When the 5,000 c/s filter was in the difference increased to 2.6 db. And when the limit of response was

TABLE.

	Tests.			
	I.	II.	III.	IV.
Full Band	64.9	58.9	20	20
7,000	64.8 0.1	58.0 0.9	17.6 2.4	16.5 3.5
5,000	62.3 2.6	55.2 3.7	16.5 3.5	15 5.0
3,500	59.8 5.1	41.1 17.8	14.9 5.1	7.2 12.8

[1] *The Wireless World*, Feb. 1st, 1935, p. 126.

High Fidelity and Background Noise—

cut down to 3,500 the difference was over 5 db. This is more, but not very much more, than would be shown by an inanimate meter equally sensitive to sounds of all frequencies.

Next, the music was brought in at a moderate volume, and the amplifier restored to "full band" conditions. Naturally, the music drowned the noise somewhat; in fact, to be just heard, the noise had to be slightly louder than in the 3,500 condition in test I. But the interesting result is that the presence of the programme causes the filters to have a very much more marked effect. With the response cut down to 3,500 the noise must be nearly 18 db stronger to be just audible. If one unit of noise power corresponded to the condition with full band, now we must have 60 units.

Looking at it backwards, we have a bad receiver, going up to only 3,500 c/s. There are present 60 units—hundredths of a milliwatt, perhaps—of noise; but during an average programme it is barely audible. Now, we get worked up about "high fidelity," and as a result of much effort extend the response of the system up to 7,500 c/s. A vast improvement in the reproduction; but unless somehow the noise can be cut down to one-sixtieth of its previous level it will appear louder than before. Clearly, this is one of the less encouraging aspects of better reproduction.

Heavy Interference

A third test was made, with the noise no less than 40 db louder, so that it would be competing with the music for prominence. With each of the restrictive filters it was readjusted until the listener considered it to be just as abominable as with the full band width. The results show that the music now has much less masking effect; the figures are much more like those in test I. Therefore, if there is a really serious amount of noise it is not abnormally sensitive to the width of the response.

Lastly, the programme was made 6 db. louder, the noise being kept as before, and therefore less in comparison. The results show that a comparatively small further superiority in strength of the music reintroduces a large measure of the effect that was noticed in test II.

Now, as it would be absurd to strive for the utmost in frequency response if at the same time a large proportion of noise were tolerated, it must be granted that the noise level must be low compared with the programme, as in test IV or, preferably, II. In either of these cases an improvement from bad to good reproduction means that in some way the sources of noise must be very considerably silenced; and, if as much as is possible in that direction has already been done, it means that the strength of the broadcast transmission must be very considerably increased.

These tests take no account of the fact that when the audible response is widened the noise is usually *increased*, due to sidebands from stations adjoining in wavelength. So it follows that a still greater increase in transmitter power is needed to give noise-free high-quality reproduction. Against this must be set an effect of which the Bell laboratories take no cognizance—the strong tendency of the listener to believe that a distant station is being heard as well as the local. That must be left to a psychological laboratory, however.

If I have any criticism to make of the Bell tests it is this: that they used filters with almost perfectly sharp cut-off, like curve A on this page, whereas the ordinary set always has a gentle slope like B. Whether this greatly affects the principle of the thing I have been unable, after deep thought, to decide. At any rate, there is sufficient room for argument for one to wish that some further figures had been issued to include the gentle slope.

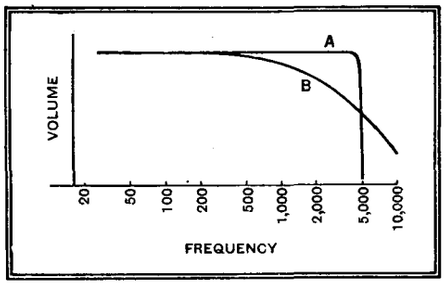

An ordinary receiver has usually a "tailing" frequency characteristic like curve B; the special apparatus described is represented by A.

Random Radiations

By "DIALLIST"

An Ultra Short Wave Feat

SOME remarkable results were obtained during the recent 5-metre transmissions from Snowdon, despite the fact that a defective valve in the transmitter made it necessary to use only one half of the push-pull arrangement. Signals were well received at ranges up to 180 miles. In one report I came across that delightful old phrase which I thought had passed away long ago. It was stated that the signal strength was such that speech could be heard "with the 'phones on the table." Doesn't that bring back memories to some of you old hands?

This Year's Sets

A GOOD many of the new season's models have already made their appearance, and most of the rest will be on view at Olympia in August. Those which I have seen already contain no spectacular developments, and I don't think that any are to be expected in the sets which are still to come. Yet there is no question that the receiving set of 1935 is a far better instrument, taking it all round, that that of 1934. Perhaps the most striking step forward is that you can now obtain for £15, or even less, all of the refinements which used to be seen only in very expensive receivers. In other words, the luxuries of one year tend to become the standard fitments of the next.

The best way of discovering how solid and how steady is the progress made by manufacturers and their designers is to try a set of a year or so ago against an up-to-date model *at the same price*. The advances then become striking.

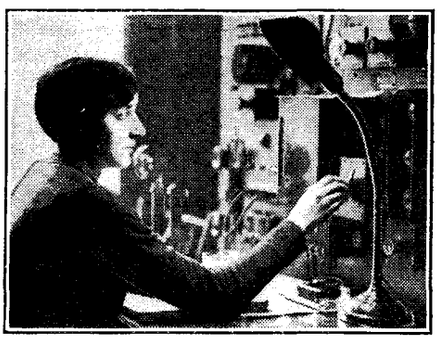

ANOTHER WOMAN ENGINEER. Senorita Angela Fernandez, control engineer at Union-Radio, Barcelona. It is believed that Barcelona, Warsaw and Bucharest are the only European stations having women on the technical staff.

What Are Our Needs ?

One way of discovering what improvements are to be expected in the near future is to see how far present-day receiving sets of good make satisfy our requirements and how far they fall short of them. Tuning, particularly where there is a visual indicator, could not be very much simpler than it is, though we do need improvements in the tuning dials which carry names of stations. Some dials are reasonably accurate; others are rather far out in certain parts of the scales. Some simple device for keeping dials of this kind up to date as new stations come into action or existing stations change their wavelengths would be a great boon. We seem to have achieved as great a measure of selectivity as we can put to good use. Background noises and "between station" noises are kept down in many sets by the use of special circuits. In good receivers hum has ceased to be an annoyance. But reproduction, good though it is, is by no means perfect. A general criticism that I would make is that few sets handle speech as well as they handle music.

Reliability

TO my mind, what we want most in wireless receiving sets is the same kind of reliability that we have in other domestic electrical appliances. At present breakdowns are of too frequent occurrence. A very large percentage of them are due to valves, and here there is most certainly room for betterment. Battery valves are pretty good, taking them by and large; in fact, though I have had hundreds in service during the past five or six years I have had very few that developed defects after being in use for a short time. It is in mains valves that greater reliability is chiefly needed.

Other components liable to give trouble are fixed resistors, volume control potentiometers and wave-change switches. A chain is proverbially only as strong as its weakest link, and one small component, if not up to its work, can put a receiving set completely out of action. The development of the wireless receiving set has often been compared

with that of the motor car. Cars ceased long ago to be cranky things, ever liable to break down, and it is high time that the wireless receiving set reached the same satisfactory position. I am not implying that all receiving sets are unreliable; what I mean is that the proportion of those which give trouble is still a good deal higher than it should be. Certain American manufacturers, by the way, have a very sound way of marketing their receiving sets; the price includes a complete kit of spare valves. I am not at all sure that it would not pay our own people to work on the same lines, with, of course, an appropriate increase in the prices of their sets.

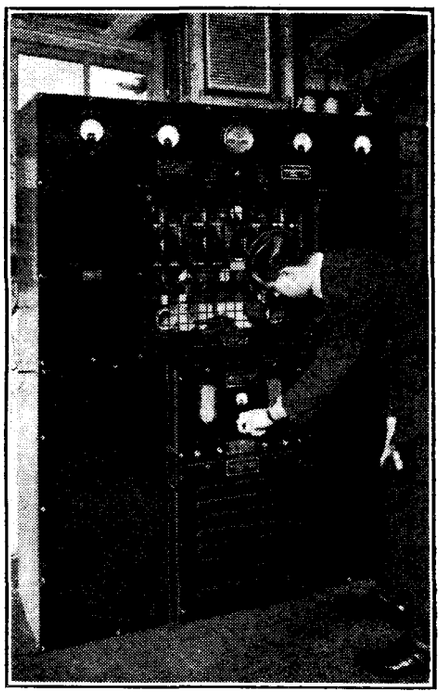

Testing a 250-watt crystal-controlled beacon transmitter at the Marconi works, Chelmsford, before shipment to Spain. The plant is to be installed at Cabo Vilano, in north-eastern Spain.

Clever Mounting for Valves

THE new all-metal tubes which have been developed by the General Electric Company of America, and described first in this country in *The Wireless World* in April last, have a mounting system which solves many problems. Ten different types have been made, ranging from a triode to complicated types such as the pentagrid. All of them, no matter what the number of their pins, fit into the same 8-socket holders. The pins are placed at equal distances apart, but in the centre of the ring of pins there is a large pin, with no connection to the "innards" of the valve, which is provided with a key. To put a valve into its holder all that you have to do is to fit the centre pin into the large socket made for its reception. You then rotate the valve until the key finds its groove. This done, the valve is pushed home.

The beauty of the system is, first of all, that one type of valveholder suffices for all kinds of valves, and, secondly, that any valve can be inserted into its holder in an instant, no matter how out of the way the corner in which the latter is situated. This second point will be readily appreciated by anyone who has spent exasperating minutes—as most of us have—in the fiddling business of feeling for the sockets in an awkwardly placed valveholder with the pins of a standard valve.

These valves are entirely different from our own Catkin types, since the metal envelope does not form the anode. It is, in fact, intended to be earthed, when it acts as a most effective shield. Even the caps of these valves are of metal, the leads passing through small glass beads sealed into eyelets of a nickel-iron-cobalt alloy in the iron base. It is claimed that they will oscillate at much higher frequencies than corresponding types with "pinches" and bulbs of glass.

A Silly Business

ANOTHER of those pirate broadcasters has been at work in the London area, using a wavelength in the neighbourhood of 285 metres and claiming an output power of 500 watts. This kind of thing seems to me too silly for words, for unless the offender is out to achieve cheap notoriety he stands to gain nothing, but lose a good deal if he is caught and smartly fined. Nobody wants these gratuitous broadcasts; they are just a nuisance, interfering with the reception of legitimate stations. For the serious amateur transmitter there is plenty of room and a big field for experiment on the various bands of short wavelength officially available to him. Let us hope that the G.P.O.'s action will be prompt and energetic. Any reader who can assist the authorities in their search for such disturbers of the ether peace will be rendering good service to wireless in general.

Woman and the Microphone

THERE are those who would like to hear women acting as announcers once more in the B.B.C. studios. Among them is Mrs. Hamilton, one of the Governors of the B.B.C., who strongly urges the claims of her sex. It is a thorny problem. This is, I believe, the only country in which women announcers are not employed at the moment. Those who would like to see them here stress their popularity in other countries. But we have already tried one woman announcer, and the opinions expressed by listeners were very definitely against continuing or repeating the experiment. It is a curious fact that the bulk of the protests received at Broadcasting House came from women listeners.

If we are to have them we shall certainly have to find some better designation than "woman announcer," which is far too much of a mouthful. "Announceress" is not very pretty; "Announcerette" sounds frivolous. Have readers any suggestions to make?

Gigantic American Sets

THERE seems to be hardly any limit to the number of valves that American set designers can incorporate in their chassis. I have never handled one of the real giants containing over a score, but I have used both 11- and 15-valve receivers, and very interesting pieces of apparatus they are. In some of the biggest sets comparatively few valves are used for the actual amplification of signals—there is a definite limit to the amount of magnification that can be employed usefully in any receiver. The rest are set to do all kinds of interesting jobs. In one receiver, for instance, an oscillator amplifier is used in order to prevent creeping on the short waves. Then it is a common practice to have separate power packs for the wireless set proper and for the output stages. An untuned valve is sometimes employed purely as an aerial coupler, and another valve may act as a "squelch," whose business is to cut out noises when one is passing from station to station.

America Takes The Plunge

By MARTIN CODEL

343-Line Television: 60 Frames a Second

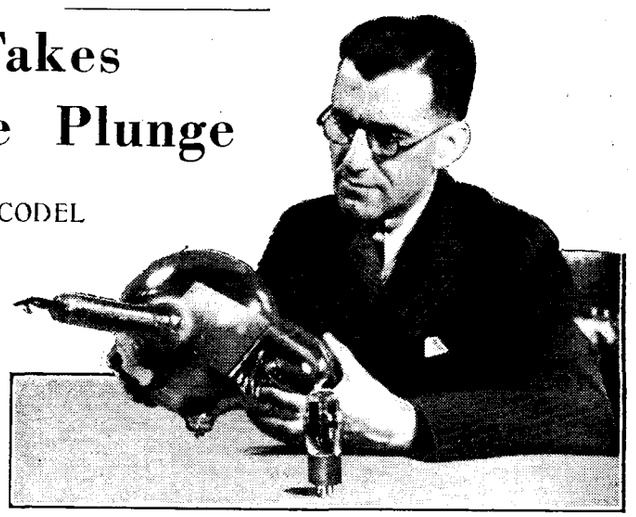

MR. DAVID SARNOFF, President of the Radio Corporation of America, has announced plans for field tests of high-definition television—343-line, 60 frames per second—to begin as soon as possible next year.

It is generally believed among American radio observers that the British and German activities in visual broadcasting are forcing the hand of the R.C.A. So much publicity has been given to European television, notably in connection with the forthcoming tests of E.M.I. and Baird in London, that the R.C.A. has felt compelled to make a start.

A new inter-company committee, comprising experts of R.C.A. and its various subsidiaries, has been formed under the direction of Dr. W. R. G. Baker, Vice-President and General Manager of the R.C.A.-Victor division of R.C.A.

"Nobody knows how long it will take to iron out some of the deep wrinkles in television as we know it to-day," Dr. Baker said, following a meeting of the R.C.A. Committee. "We have made a great deal of progress in our research laboratories during the past three years. While the difficulties are many, we are confident of the ultimate results."

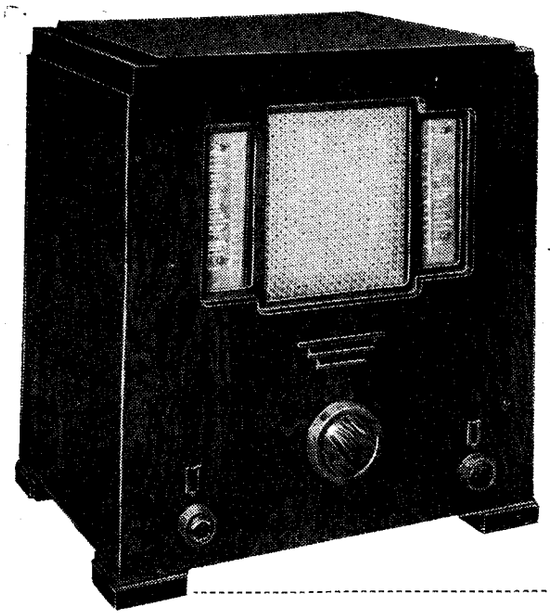

Cossor MODEL 364

An AC Superhet with a Novel Tuning Indicator

FEATURES.—***Type.***—*Table model superheterodyne for AC mains.* ***Circuit.***—*Heptode frequency-changer—var.-mu pentode IF amplifier—double-diode detector — high-slope pentode output valve.* ***Controls.***—*(1) Tuning. (2) Waverange and on-off switch. (3) Volume.* ***Price.***—*11 guineas.* ***Makers.***—*A. C. Cossor, Ltd., Highbury Grove, London, N.5.*

THIS receiver, although essentially simple in design and construction, and consequently moderate in price, incorporates all the features necessary for satisfactory performance under modern receiving conditions.

The use of a high-slope pentode in the output stage has permitted the simplification of the second detector stage, which consists of a double-diode without the usual accompaniment of a triode amplifier. Ample volume is obtainable with this arrangement from radio signals, but there are many excellent gramophone pick-ups the output from which would be hardly sufficient to operate the output stage directly without some additional amplification. To overcome this difficulty the IF amplifier is converted into an LF amplifier when the waverange switch is turned to the "Gram." position. The anode circuit of the frequency-changer is short-circuited and the output from the pick-up is injected in series with the grid circuit of the first IF transformer; at the same time the amplified output in the anode circuit of the "IF" valve is transferred directly to the volume control potentiometer by switching in a fixed condenser joined to the top of the output IF transformer primary.

On the radio side an inductively-coupled band-pass filter is included between the aerial and the heptode frequency-changer. Both this valve and the IF amplifier are automatically controlled by bias derived from the diode in the second detector which is connected to the primary of the IF output transformer. Delay voltage is obtained from the bias resistance in the cathode of the output valve. The signal diode is connected to the secondary of the output IF transformer, as usual, and the volume control potential itself constitutes the load in series with this diode. A resistance-capacity HF filter is included in the grid lead to the output valve. Tone correction in the anode circuit of this valve is fixed, and consists of a single condenser in parallel with the primary winding of the output transformer.

On a good outdoor aerial the number of foreign stations receivable on this set will more than satisfy most people's requirements, and if the reserve of sensitivity is not sufficient to bring in some of the more obscure and distant low-power stations there will be no cause for complaint in the volume and reliability of those stations which are normally regarded as of good programme value.

The selectivity is such that in Central London the Brookmans Park transmitters account for the loss of not more than two channels on either side of their normal settings. On long waves the reception of the Deutschlandsender was noticeably above the average, though there was at one time some side-band interference from Droitwich and Radio-Paris, which, in the absence of a variable tone control, could not be eliminated.

The AVC functions perfectly satisfactorily, and although there were a fair sprinkling of second-channel whistles, both on long and medium wavelengths, only one, coinciding with Brussels No. 1, was of any serious consequence.

Clear Reproduction

The quality of reproduction is very pleasant to listen to, and while extreme high and low frequencies may be missing, the uniform output in the middle register gives clear speech, and all the essential foundations of musical reproduction without the drawbacks of background hiss and unnatural boom.

The cabinet design is well balanced and the loud speaker grille of woven material is

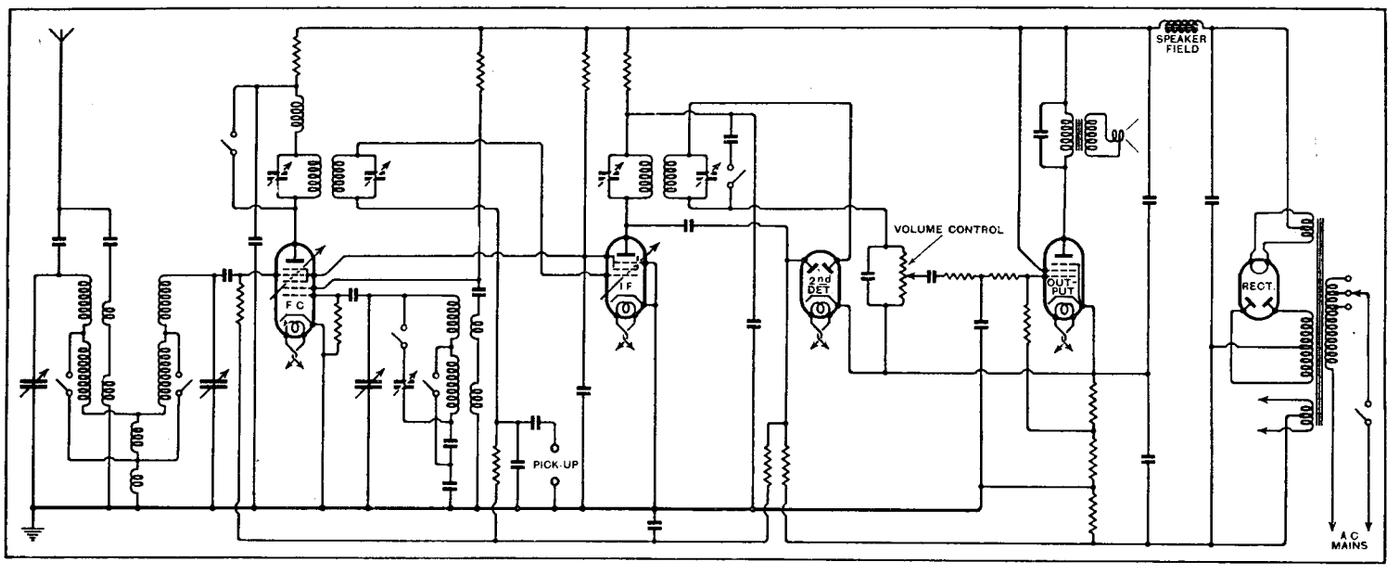

A double-diode without the customary triode amplifier is used in the second detector stage and the IF amplifier is used as a first LF stage for gramophone reproduction.

Cossor Model 364—

distinctive. The most interesting feature of the set, however, is the "thermometer" tuning indicator. The medium- and long-wave dials are separate and run parallel with the vertical sides of the loud speaker grille. Each has a glass tube in which a rod of black material moves up and down, thus simulating the appearance of a column of liquid. The indicators work in opposite directions and are actuated by the main condenser spindle, the appropriate scale being illuminated automatically by the waverange switch. The settings of the principal European broadcasting stations are indicated on transparent strips which are readily detachable and may be replaced in the event of future alterations of wavelength. The dials also carry figures indicating approximate wavelengths, but the intermediate graduations appear to have been included only from the point of view of appearance, as they are not accurate sub-divisions of the spaces between the numerals.

The chassis layout is neat and the construction and finish are sound. The rectifier valve is mounted on top of the mains transformer and the mains voltage adjustment is readily accessible. There are sockets for the addition of an external loud speaker, but the aerial and earth connections are made to a pair of screw terminals which many people will prefer to the more usual plug and socket connections.

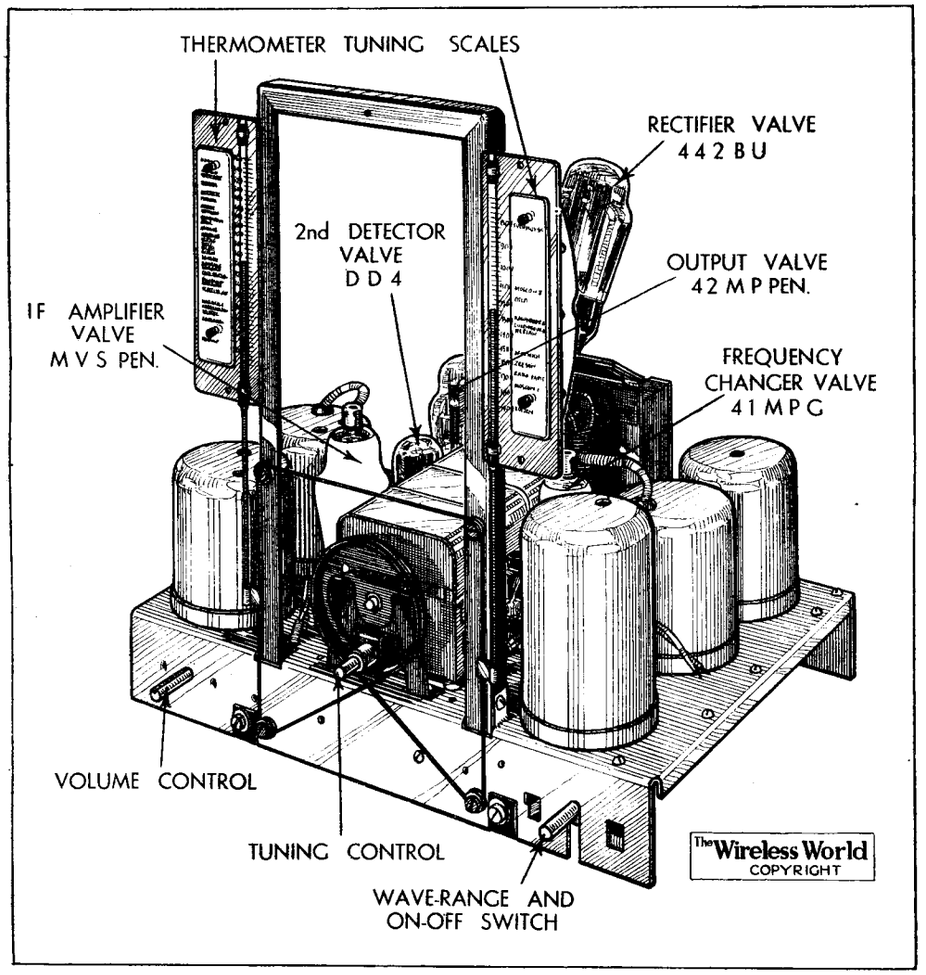

Thin rods working in glass tubes constitute the novel "thermometer" tuning indicators in the Cossor Model 364.

Next Set Review—

PHILCO MODEL 98

Parallel Resistances and Series Condensers

A Simple Method of Graphical Calculation

EVERYONE who takes more than a passing interest in wireless has felt the need to calculate the value of two or more condensers connected in series or of resistances in parallel. The value is, of course, given by the reciprocal of the sum of the reciprocals of the individual values and is quite easy to compute provided that a slide-rule or a conversion table is at hand. This is not always the case, however, and the writer recently came across a little-known non-mathematical method which is both easy and convenient. It requires no apparatus other than a rule and pencil.

The method is best illustrated by an example, and we will suppose that we wish to calculate the value of two resistances in parallel, one being 200 ohms and the other 500 ohms. Referring to Fig. 1, the first step is to draw a base line XY of any convenient length. Then from any point A perpendicular to XY draw a line of length 200 units. It should be noted that any scale can be used, and in this case it is convenient to choose two inches or two centimetres to represent 200 ohms. The next step is to draw another perpendicular of length 500 units; this may be at any point C along XY, but the greatest accuracy is obtained by making the distance AC of the same order as that of the lines AB and CD.

Having drawn the two perpendiculars, join BC and AD, and drop a perpendicular to XY from their point of intersection O meeting XY at Z. Then the length OZ represents the value of the two resistances in parallel, and if AB = 2in. and CD = 5in., OZ will be 1.43in., so that the two resistances in parallel have a combined value of 143 ohms. If condensers be used in series, the process is exactly the same, thus condensers of 200 $\mu\mu$F and 500 $\mu\mu$F give a resultant capacity of 143$\mu\mu$F.

If three parallel resistances be employed, the value of any two of them is found in this way, and then this is treated as a single resistance and its value when combined with the third can be found by repeating the process.

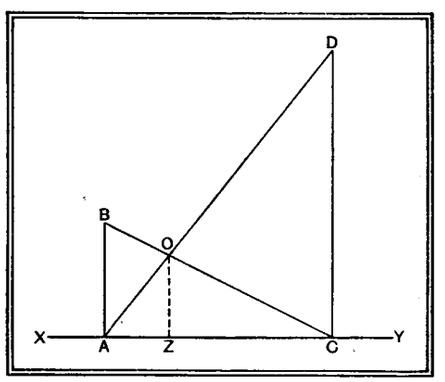

Fig. 1.—Method of calculating the value of two resistances in parallel.

Higgs Receivers

A FOUR-VALVE superheterodyne with QAVC is the principal model in the new season's programme. This receiver in table-model form costs 11½ gns. and is available for AC mains only (Model A56R) or as a universal AC/DC set (Model U56R). The inclusion of QAVC in a receiver at this price is noteworthy, and the tuning dial is also a feature which will well repay investigation. The circuit consists of a band-pass filter preceding an octode frequency changer, and followed by a single IF stage, a double-diode detector and a high-slope output pentode. A radio-gramophone version is available at 19½ gns. for AC mains only, but a universal model can also be supplied to special order for an additional 2½ gns.

A battery version of the table model is housed in a similar cabinet and closely follows the mains chassis in specification. The price of this model, the B56R, is 11 gns.

Listeners' Guide for the

THE NAVAL REVIEW

THE Royal Naval Review broadcasts undoubtedly take precedence over all others during the coming week.

Cruisers, aircraft carriers, destroyers, sloops, submarines, convoy ships, auxiliaries, torpedo boats, picket boats, trawlers—in fact, representative craft from every type which forms the Royal Navy, will be assembled at Spithead on Tuesday next, July 16th, to be reviewed by H.M. the King. This will be the third time that His Majesty has reviewed his Navy.

THE ROYAL SALUTE

In accordance with tradition, the King's yacht, the "Victoria and Albert," will steam out of Portsmouth Harbour and, as it approaches the lines formed by more than 160 men-of-war, will be greeted by the Royal Salute fired from the ships' guns and played by the ships' bands.

At the conclusion of the review the Fleet's air arm will fly past.

The broadcast commentaries are to be given by Commander D. A. Stride and Lieut.-Commander R. Woodroffe, from the deck of the "Royal Sovereign," and, as readers of *The Wireless World* already know, they are using the B.B.C.'s "Boat Race" short-wave transmitter, a receiver being located on the mainland near Southsea Castle.

THE ROYAL NAVAL REVIEW on Tuesday next provides the broadcast of the week. From the deck of the "Royal Sovereign" Commander Stride and Lieut.-Com. Woodroffe will describe the Review in detail, and four microphones will pick up the gun salutes, cheers of the ships' crews and other characteristic sounds. The photograph gives a picturesque glimpse of a section of the Fleet at anchor.

FOUR "MIKES" AND BOAT RACE TRANSMITTER

THE commentaries begin at 2.5 p.m. when the Royal yacht is leaving Portsmouth. The peak moment occurs at 4 p.m., when the "Victoria and Albert" steams past the "Royal Sovereign." Four microphones will pick up the Gun Salute, the music of the bands, and the cheers of the crews, and the progress of the yacht will be judged by rise and fall of the accompanying sounds. At 5.20 the King will return down the line of battleships, while the microphones pick up the roar of the 'planes belonging to the Fleet air arm as they fly past.

To complete the day, Commander Stride will have the difficult job, at 11.15 p.m., of describing the fireworks and illuminations.

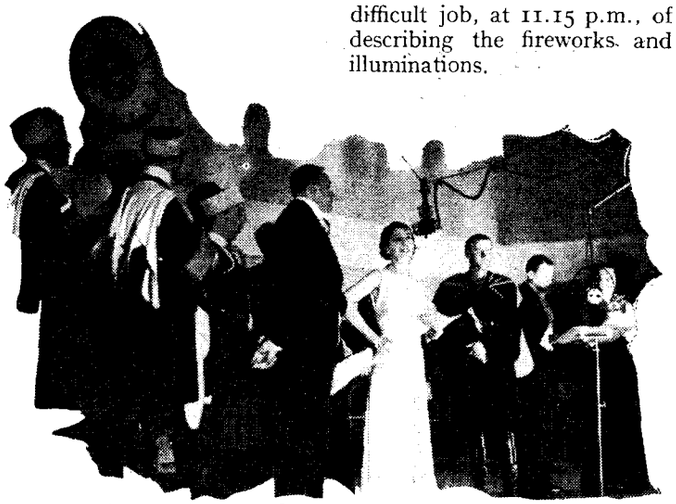

"THE RED SARAFAN." Listeners can spend another night in a restaurant of pre-war Russia on Monday (National, 8), when the guests will include Olga Alexeeva (soprano), Alexander Strelsky (tenor) and Vladimir Lealoff (balalaika). Emilio Colombo will conduct the Red Sarafan Orchestra. The above photograph was taken during the first evening at "The Red Sarafan" in May last.

STRANGE INSTRUMENTS

THERE should be novelty and charm in the International Folk Music Recitals which will be given daily next week, beginning on Sunday.

These studio broadcasts have been arranged in connection with the International Folk Dance Festival which is being held in London from July 15th to 20th under the patronage of the Queen.

Listeners to these programmes will hear songs and instrumental dance tunes performed by visitors from Brittany, Italy, Norway, Poland, Switzerland, and many other countries.

The Swiss players (Monday, National) will provide yodellers and a performer on the alpenhorn—an instrument so large that it would seem necessary to use Maida Vale or "No. 10" studio.

Italian and Bulgarian folk music will be heard on Tuesday (National), the latter consisting of selections on such primitive instruments as the Gaida, the Kaval, and the Gusla. Even their names are satisfying.

ALL-RUSSIAN

WHERE Russian entertainment is concerned it would seem that one either likes it or does not, to judge from the correspondence received at Broadcasting House. Listeners in the former category are highly appreciative of the new broadcast feature, "The Red Sarafan." Telegrams were received after the last broadcast from all over England, many of the senders being Russians who thrilled at the experience of "visiting" a restaurant having the atmosphere of their own country in the days of the Tsar.

The special guest at next Monday's entertainment (National, 8) will be the singer, Marina Yublova, and other visitors will include Olga Alexeeva (soprano), Alexander Strelsky (tenor), and Vladimir Lealoff (balalaika). Emilio Columbo will be present with his "Red Sarafan" Orchestra, and mine host, as before, will be Captain Vivien, Marquis de Chateaubrun.

"MUSIC OF MEN'S LIVES"

FAY COMPTON is starring as "The Mother" in Compton Mackenzie's Silver Jubilee feature, "The Music of Men's Lives," to be broadcast on Tuesday (National, 8.15), and Wednesday (Regional, 8.45). A typical Compton Mackenzie theme will be woven into this panorama of popular entertainment during the last twenty-five years, and the result should be a first-class entertainment.

Week

Outstanding Broadcasts at Home and Abroad

HIGHLIGHTS OF THE WEEK

FRIDAY, JULY 12th.

Nat., 8, Henry Ainley in "Hassan." ¶Harry Roy and his Band.

Reg., 8, Medvedeff's Balalaika Orchestra. 8.30, "Seeing Life" (Ernest Longstaffe).

Abroad.

Hilversum, 8.10, Symphony Concert by the Hague Municipal Orchestra.

SATURDAY, JULY 13th.

Nat., Royal Review at Aldershot. ¶Test Match Commentaries from Leeds. ¶Fred Hartley and his Novelty Quintet. ¶Music Hall.

Reg., Organ Recital by Maurice Vinden. ¶"Sinbad the Sailor." ¶Ambrose and his Embassy Orchestra.

Abroad.

Radio-Paris, 8.30, Opera: "Falstaff" (Verdi).

SUNDAY, JULY 14th.

Nat., Pianoforte Recital by Berkeley Mason. ¶The Hague Singers, conducted by J. Vranken. ¶Bournemouth Municipal Orchestra. Soloist: Oda Slobodskaya.

Reg., B.B.C. Military Band. ¶International Folk Music Recital, B.B.C. Orchestra (C), and B.B.C. Chorus (A).

Abroad.

Munich, 8, "Soldiers"—a musical radio play of the 16th and 17th centuries.

MONDAY, JULY 15th.

Nat., Test Match Commentaries. ¶International Folk Music Recital, 8, "The Red Sarafan." ¶French-Canadian Programme.

Reg., Leslie Bridgewater Quintet. ¶B.B.C. Theatre Orchestra.

Abroad.

Kalundborg, 8.15, Scandinavian Music by the Radio Orchestra.

TUESDAY, JULY 16th.

Nat., Test Match Commentaries. ¶2.5, 4, 5.20 and 11.15 p.m. Royal Review. ¶International Folk Music Recital. 8.15 "The Music of Men's Lives."

Reg., New Georgian Trio. ¶B.B.C. Military Band. ¶Pianoforte Recital by William Murdoch.

Abroad.

Stuttgart, 8.10. Operetta: "Fanny Elssler" (Johann Strauss).

WEDNESDAY, JULY 17th.

Nat., Sandy Powell's Album III. ¶International Folk Music Recital. ¶B.B.C. Orchestra (C) conducted by Malcolm Sargeant. ¶Transatlantic Bulletin.

Reg., B.B.C. Dance Orchestra. 8.45, "Music of Men's Lives."

Abroad.

Brussels I, 8, Beethoven-Wagner Concert by the Symphony Orchestra.

THURSDAY, JULY 18th.

Nat., International Folk Music Recital. 8.15, "The Mulberry Bush" (E. M. Delafield). ¶Leslie Bridgewater Quintet.

Reg., B.B.C. Orchestra. ¶Variety, directed by Ernest Longstaffe.

Abroad.

Deutschlandsender, 8. 10, Old and new dance tunes.

TURNING THE PAGES

No oppressively learned acquaintance with literature is necessary to savour the jolly pages of Sandy Powell's Albums, the third volume of which is to be opened at 6.30 on Wednesday next (National). Here is ideal entertainment for a hot (or cold) July evening, and the *dramatis personæ* for next week include: Afrique, The Radio Three, Van Dusen, Peggy Whitty, The Harmonica Band, Frank Lorden, Harry Bidgood and his band, and, of course, Sandy Powell himself.

A SOCIAL COMEDY

AMONG the few well-known authors who have taken the trouble to write exclusively for broadcasting is E. M. Delafield, whose radio play, "The Mulberry Bush," was first broadcast in August, 1933.

This "social comedy" is to be repeated in the National programme at 8.15 on Thursday next with a strong cast.

Cecil Scott-Paton takes the part of Yarrow, the schoolmaster. Evans, his junior, will be played by Glen Byam Shaw, Dolly Mostyn by Mary Byron, and Pauline by Jenny Nicholson.

OPERA

To-night Rousseau's one-act comic opera, "Le devin du village," will be given by the Berne Municipal Orchestra at 9.10 and relayed by Beromünster. Excerpts from Wagner's "The Valkyrie" figure in the Toulouse programme at 9 p.m. on Sunday and the same station, on Wednesday at 9.45, gives excerpts from Massenet's opera, "Don Quixote."

INTERNATIONAL FOLK MUSIC RECITALS. Peasants of Brittany will be heard in a recital on the bombarde and the biniou (seen above) in a B.B.C. studio on Sunday. (Regional, 6.15.)

SWEDISH SONGS

Swedish music is a treasure house of folk songs, many of which have become famous all over the world. Some examples will be offered listeners to-morrow evening (Saturday) at 6.45 in the Motala programme by the celebrated Frösökören choir, conducted by Arvid Hernth.

NEAPOLITAN DANCERS will be heard in songs and folk dance music in the International recital on Tuesday. (National, 7.45.) Recitals of international folk music are being given throughout the week.

ORCHESTRAL CONCERTS

Some good orchestral concerts are promised during the next seven days. To-morrow night (Saturday) at 10.10 the Vienna Symphony Orchestra will be heard under the direction of Herr Webern, the violin soloist being Schneiderhahn. French ballet music will be given by the Symphony Orchestra at Brussels No. 1 at 8 p.m. on Sunday. Kalundborg promises Scandinavian music by the Radio Orchestra at 8.15 on Monday. A Beethoven-Wagner concert by the Brussels No. 1 Symphony Orchestra will be heard at 8 p.m. on Wednesday.

NOVELTIES

Stuttgart: Blackbird, Thrush, Finch and Starling programme (Friday, July 12th, 8.55).

Munich: Relay of village ball from the Bavarian Alps (Monday, July 15th, 9 p.m.).

Brussels No. 11: Scenes in a cabaret in the International Exhibition (Monday, 8 p.m.).

Leipzig: Musical "fireworks" with a Balalaika Quintet (Thursday, July 18th, 8.10 p.m.).

GLASS HARP

Those who have not heard a "glass harp" should tune in the late night variety programme from Munich at 11 o'clock on Tuesday next. Bruno Hoffmann will play this curious instrument, accompanied by the Radio Four, a vocal soloist and a small orchestra. Hoffmann's glass harp consists of tumblers of varying sizes, carefully tuned, played with a moistened finger.

THE AUDITOR.

30-LINE TELEVISION

Baird Process Transmissions.
Vision, 261.1 m.; Sound, 296.6 m.

MONDAY, JULY 15th.
11.15–12.0 p.m.
Isolda Maya (dances); Jean Colin (songs); Doris Hare (songs); Max Kirby (songs and dances); The Two Toys (dances).

WEDNESDAY, JULY 17th.
11.0–11.45 p.m.
Gavin Gordon (bass-baritone); Maisie Seneshall (diseuse); Maxim Turganoff (Russian tenor).

HINTS and TIPS

Practical Aids to Better Reception

IT is inevitable that the ganging of a circuit to which reaction is applied should be affected by manipulation of the reaction control. This is because the input impedance of the valve concerned undergoes a change, which alters the effective stray capacity across its grid circuit. From this it follows that the operation of trimming the circuits of a straight receiver should always be carried out with the reaction control set as close as possible to oscillation point. By doing this one is assured that the circuits will always be correctly aligned when maximum sensitivity is most needed.

Reaction and Circuit Alignment

DUE to the fact that the valve heaters are directly in series with the mains, universal AC-DC and plain DC receivers are inclined to suffer from a rather high level of background noises. But there is no doubt that sets of this class which include built-in mains HF filters are noticeably quieter in this respect, and where this refinement is absent its addition is almost certain to be a worth-while investment.

Mains HF Chokes

To be effective the filter should consist of two chokes and two condensers connected as shown in Fig. 1. It is not absolutely essential to procure special chokes for the purpose, but those amateurs who contemplate making use of components intended for other purposes are warned not to forget Ohm's Law. For example, the usual radio type of HF choke is quite useless: an average specimen may have a resistance of over 200 ohms, and two of these, assuming 250 milliamps to be quite a normal mains current, would deprive the set of 100 volts of its power supply!

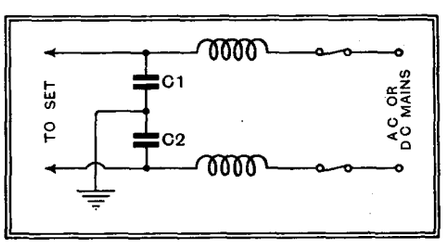

Fig. 1.—An anti-interference filter specially suitable for universal or DC sets. The condensers C1 and C2 may have a value of 0.01 mfd. or more.

However, it is a simple matter to wind one's own chokes, using insulated wire of about No. 26 gauge, and it is often possible even to use long-wave plug-in coils without alteration, as their inductance may be near enough to the required value. The resistance of each, however, should preferably not exceed 10 ohms.

Incidentally, the filter need not necessarily be fitted on the chassis nor even inside the cabinet—in fact, a possibly more effective position would be at the distribution box from which the leads feeding the set are taken. But in many cases current for lamps, etc., is taken from the same point, and to avoid excessive voltage drop, chokes of exceptionally low resistance might be needed.

AS a general rule the anode current passed by all the valves in a receiver should remain constant, irrespective of tuning or the strength of incoming signals. Grid or anode-bend detectors are exceptions, as are output valves employed in quiescent systems such as QPP or Class "B." It is also well known that violent current fluctuations take place in the anode circuits of overloaded amplifying or output valves; but this, far from being a normal condition, is an indication of incorrect working.

Varying Anode Current

It is sometimes useful to know that an appreciable, though often slight, change of oscillator anode current takes place as the tuning of a superheterodyne is varied. Amplitude of oscillation is never quite constant over the whole range, and this inconstancy accounts for the change.

Variations are usually quite gradual, and any abrupt change conveys the warning that there may be a fault. All this applies to the oscillator section of combined frequency-changers as well as to separate oscillators.

IT is a fortunate circumstance that fixed condensers, unlike resistances, seldom vary seriously from their rated values and consequently the need for capacity measuring instruments seldom arises outside the laboratory. Nevertheless it is extremely useful to possess some means of quickly testing the *condition* of a condenser, for the two common faults, internal short-circuits and disconnections, give no visible indication of their presence, and when they do occur are apt to prove irritating.

Testing Condensers

In this connection it may not have occurred to many readers that a neon glow-lamp lends itself admirably to testing the state of condensers. The simple connections of a tester of this kind are given in Fig. 2; V represents a source of voltage of 100 volts or more, which may be either DC mains, rectified AC, or an HT battery, and the appropriate type of neon lamp should be chosen accordingly.

It will usually be convenient to check condensers *in situ* by means of a pair of leads and test prods, interpreting the behaviour of the lamp as follows: a momentary flash as the prods are applied indicates a good condenser; a continuous glow, a "dead short"; no glow at all, an open circuit; while spasmodic flashing shows a leak or partial "short."

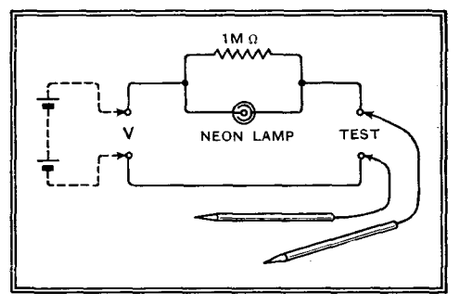

Fig. 2.— A neon lamp tester for condensers.

IN a recent "Hints and Tips" paragraph it was stated that, although it is bad practice to discharge an LT accumulator cell below the safety limit, no great harm is likely to be done if it is put on charge *immediately*.

Ill-treated Accumulators

As a footnote, and as a further warning, it may be pointed out that battery users should never succumb to the temptation to make use of the recuperative property of secondary cells—a property that exists, but not to such a marked extent as with dry batteries. As an example, a cell that is quite incapable of producing sufficient emission from the valves may, after a period of rest, give a further few minutes of tolerable working, but, if allowed to do so, will be seriously injured.

AS a great many readers may have found, a long "electrician's" screwdriver makes an excellent "feeler" to assist one in diagnosing faults while a set is switched on. But it is also a fact that by careless use of the tool in this way many a valve filament has been destroyed, and those who have not yet been chastened by experience will be wise to guard against accidents of this sort by insulating the shafts of their screwdrivers. This may be done very effectively merely by slipping on a length of large-diameter systoflex sleeving so that it exposes no more than about an inch of the blade itself; should it be desired to do so, at any time, the insulation can be removed in a second.

Insulating a Screwdriver

BROADCAST BREVITIES

By Our Special Correspondent

Educational Drive

SIR JOHN REITH will not be beaten. His recent allegations concerning the dilatory attitude of educational authorities in broadcasting matters was simply the prelude to a determined campaign to put educational broadcasting well to the fore among B.B.C. activities.

Zero hour, I understand, occurs in the autumn, and plans are already well advanced for making the schools radio-conscious.

Paid Secretary

One of the first steps will be the appointment of a paid secretary to the Central Council for School Broadcasting, and the choice will probably fall upon a well-known personality in educational circles.

This appointment will enable Miss Mary Somerville, the present secretary, to devote the whole of her time to the practical direction of school broadcasting.

Technical Help

Not all the B.B.C. energies will be devoted to the broadcasting side. B.B.C. engineers have been instructed to help in developing and improving the standard of reception in schools. It is not generally known that the B.B.C. will readily send an engineer to any school to discuss the type of receiving set best suited to the particular conditions.

A New Deal

To assist schoolmasters a comprehensive questionnaire is also available, together with a list of recommended sets for school use.

All these facts will be re-emphasised in the campaign of microphone and Press publicity which is to give school broadcasting a New Deal in the autumn.

Scots in Trouble

WITH characteristic caution, Scotsmen are only just beginning to complain of variations in signal strength which had their beginnings five months ago, when the wavelength changes took place.

Scotsmen complain, and the B.B.C. does not deny the charge, that reception is patchy, particularly in the Glasgow district.

Tests in Glasgow Streets

It was revealed to me last week that B.B.C. engineers, in consequence of protests from listeners, have actually carried out field strength measurements in the streets of Glasgow. They have found that reception from Scottish Regional may be good in one street and bad in another, though it would be hardly fair to deduce from this that the transmitter is at fault; local shielding must play a considerable part in such phenomena.

Unsatisfactory Explanation

The B.B.C. contend that many listeners were working with a very narrow "margin of safety" when the station was on the 373.1-metre wavelength. With the rise in wavelength and slight aerial alterations, reception in the case of these persons fell just below the strength at which the programmes could be really enjoyed.

I have an idea, however, that, economical as they are, Scotsmen do not listen in such a precarious manner; the B.B.C. explanation is more likely to incense than to satisfy.

"L. G." and the Microphone

MR. LLOYD GEORGE will broadcast in Welsh on Thursday, August 8th. The occasion will be a relay of the Royal National Eisteddfod of Wales, which takes place at Carnarvon this year from August 5th to the 10th.

Mr. Lloyd George, who is Constable of Carnarvon Castle, will be attending his forty-second Eisteddfod in his own borough.

The broadcast will be concerned with the Chairing of the Bard, the most picturesque event of a crowded week. The Chair is awarded each year for an ode written in strict Welsh metre, and is the Blue Riband of Welsh literature. It is now a tradition for Mr. Lloyd George on this occasion to address his own people in their own tongue.

VESUVIUS BROADCAST. Through the enterprise of the Columbia Broadcasting System of America, listeners in the U.S. last week heard a multi-lingual commentary from the crater of Vesuvius besides the actual sounds of the volcano. This picture was taken on the edge of the volcano.

Back Your Fancy

JACK PAYNE, who is now holiday-making in France, has bought several racehorses. It is hoped that Henry Hall will follow suit, so that listeners will soon be able to back their fancy in the Foxtrot Stakes.

Locum-tenentes

I understand that several first-rate bands will come to the B.B.C. studios while Henry Hall and his Band are at Olympia during the week August 19th to the 24th, and again while they are holiday-making from August 26th to September 9th.

No choice has yet been made.

Short-wave Voices

THERE are now four Empire announcers at Broadcasting House—Messrs. Schewen, Gray, Dougall and Richardson—and I am told that they were chosen because their voices were regarded as specially suitable for transmission on short waves.

A Teaser

One of the Empire announcers was recently presented with a news item about a race which a horse named "Gonedry" won. The proper pronunciation had to be decided upon instantly. "Go-nedry" or "Gon-edry"? It was rather galling to learn afterwards that the name was "Gone-dry."

Makes the Whole World Kin

Apparently a cough, when broadcast to the Empire, is fraught with the deepest significance. A Nigerian listener wrote recently saying that he had had a party of natives listening to an Empire transmission. They were not greatly interested until the announcer cleared his throat—"then a scream of approbation rose from the audience."

A planter in Assam had the same experience with a group of head-hunters. "The announcer clearing his throat," he wrote, "made them wriggle with excitement."

National Anthems

FROM time to time it is urged that the National Anthem should figure more frequently in the B.B.C. broadcasts. The Americans are now deciding that the "Star Spangled Banner" should be heard on the air more regularly.

Hint to America

In a letter to the Federal Communications Commission, Mrs. Virginia E. Jenckes, the Indiana woman member of Congress, points to the impressiveness of the British Empire broadcasts which end with "God Save the King" and the French short-wave relays which are rounded off with the "Marseillaise." "It is a regrettable fact," she writes, "that the 'Star Spangled Banner' is seldom heard."

Fill High the Glass

THE first suggestion that the pleasure to be derived from a B.B.C. programme will be enhanced by resorting to alcoholic refreshment comes with the announcement of Julius Buerger's programme, "The City of Music," which will be heard on July 24th and 25th. This *potpourri* will take listeners through 150 years of Viennese music—folk songs, waltzes and carnival melodies—and the compiler "hopes that British listeners . . . perhaps to the accompaniment of a glass of Tokay, will be able to join in the singing."

Letters to the Editor

The Editor does not hold himself responsible for the opinions of his correspondents

Foreign Broadcasts in English

WHY should you criticise foreign stations for giving news in English? You are not compelled to listen. You have had always a reliable news service from the medium- and long-wave stations of England. For some years many English people in the British Empire have had to rely solely on Paris Radio Coloniale for their news. We owe this station a great debt; we freely acknowledge it. Even to-day, speaking generally, Paris is a more reliable station than the Empire station; the news they give from Paris is far better as news; it is utterly unbiased, too. If you dislike the propaganda from some stations, then please say so; but do not include all foreign stations. F. H. JOHNSTON.

Assam.

Records and Recording

IN recent issues several readers have been making suggestions for the improvement of the ubiquitous lateral-cut gramophone record. I have been very interested in the various points, and I am now encroaching on your space to put a few details of a major development in the gramophonic world.

It is with reference to hill-and-dale, contour, or vertical recording, and I submit the following information with some diffidence as, probably, many of your readers are already conversant with this development. But it may be new and of interest to others.

In America, where the development originated and found most of its applications, these aforementioned phono-cut discs, so-called because Edison used the hill-and-dale system of recording for his old phonograph cylinders, have been in use a considerable time for "diagonalisation" purposes in broadcasting and, in certain instances, for "dubbing" on to sound-films.

A noteworthy example of their use for dubbing or re-recording on to the sound-track is in the film "One Night of Love." In this production the singing sequences, featuring Miss Grace Moore, were dubbed from hill-and-dale cut discs on to the sound-track, and, as also, the scenes were recorded in an acoustically designed studio and not in the average film "set," the excellent sound-quality was the evident result.

The records used are of the flexible kind, made (from a cathode-sputtered wax) of cellulose acetate and thus practically non-inflammable, and the radial pitch of the grooves can be made so small that the playing-time is from fifteen to twenty minutes for a twelve-inch disc at $33\frac{1}{3}$ r.p.m. A speech-to-surface-noise ratio of more than 60 decibels is obtained, and a 30 decibels greater intensity or volume variation than that of the standard record is possible. The frequency range is two octaves wider, and, as the discs are reproduced with a very light moving-coil pick-up, total weight less than 1 oz., fitted with a permanent diamond or sapphire stylus or needle, the record wear is negligible for many thousands of playings.

Undoubtedly these discs have great possibilities, but for commercial and economic reasons it is a debatable subject whether they will be produced in this country. DONALD W. ALDOUS.

Ilford, Essex.

Modulated Test Oscillator

THE instrument described in *The Wireless World* of May 17th can well form the nucleus of a higher grade instrument. The following suggestions may be interesting to your readers desiring to improve the original design.

The presence of harmonic voltages in the anode circuit of an oscillator is not conducive to frequency stability. Moreover, an oscillator with good waveform is generally more stable than one with greatly distorted grid and anode currents. The Colpitt's arrangement has an advantage in this respect over certain other types, since the paths between anode and filament and grid and filament offer low impedance to harmonic voltages.

A paper entitled "A Recent Development in Vacuum Tube Oscillator Circuits," by J. B. Dow (*Proc. I.R.E.*, December, 1930), showed that, by properly proportioning the voltages applied to the anode and screen of a screen-grid valve, the oscillator frequency could be made almost independent of changes in supply voltage.

The application of this system to the Colpitts arrangement results in excellent stability for all normal purposes.

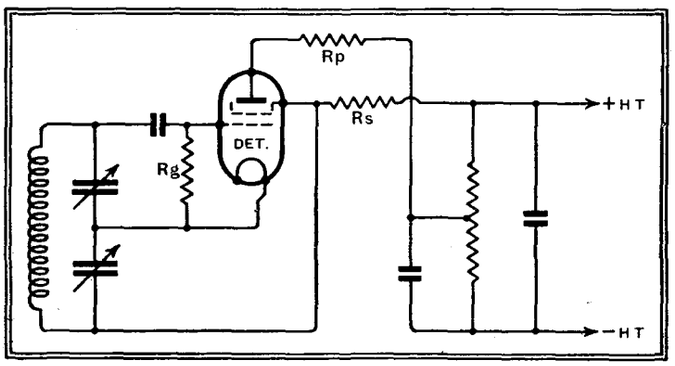

Diagrammatic example of the stabilising feature applied to the Colpitts arrangement.

The resistances R*s*, R*p*, and the grid leak R*g*, have some effect on the stabilisation point. Experimental methods best determine this point for different valves.

In this arrangement the anode is at a lower potential than the screen, as in the Dynatron arrangement. R. E. BLAKEY.

Everett, Edgecumbe, and Co., Ltd.

London.

British Wireless Abroad

YOUR "Editorial Comment" in the June 14th issue could not better describe the situation in Egypt.

Provided your suggestions are followed, manufacturers desirous to extend their business overseas have in this country a fine opportunity.

For one thing, the radio amateur and home constructor is long since dead in Egypt for lack of parts. Now and again parts may be found with the dealers, but the prices are such that the most enthusiastic constructor is immediately discouraged.

Despite all that is written in England about the high cost of radio parts, the amateur in Egypt would be only too glad to resume his hobby if he could obtain parts at prices as charged for by the dealers in the United Kingdom, and I assure you that appreciable business could be done in this line. Naturally, diligent co-operation between the different radio-part manufacturers is essential.

I shall certainly be very glad to co-operate with any manufacturers wishing to take advantage of the situation and increase their sales, either as a service repair depot or distributor, or both.

LAWRENCE AZZOPARDI.

294, Rue D'Aboukir,
Mustapha Pasha,
Alexandria, Ramleh-Egypt.

Cinema Talkie Quality

HAVING read with considerable interest the recent correspondence appertaining to the quality of talkie reproduction, I am impelled, after returning from a visit to the cinema, to pen a protest against the doctrine of those who ascribe to the view that the quality of sound reproduction is, in the main, satisfactory.

The vocal and orchestral items leave, in my opinion, a very great deal to be desired, the degree of distortion being such that any commercial firm marketing radio apparatus with equivalent reproduction would to-day stand as much chance of survival as the proverbial snowball in Hades.

We have been informed that the sound apparatus is to-day so designed as to make overloading, with its companion distortion, out of the question; this being the case, we cast our suspicions on the film folk with their recording methods, but here again we have had advanced the plea that the present system is above suspicion.

Where, then, does the fault lie?

If the manufacturers and film producers really think that to-day the results of their efforts are acceptable, apart from masculine speech—and this often sounds like the captain of a steamer trying to make himself heard above a gale—then I can only assume that they are extremely tolerant in their viewpoint as to what constitutes good quality.

I am aware that the technicians and experts will protest that my remarks are totally inaccurate and possibly grossly exaggerated, but, if my own particular radio receiver were capable of no better reproduction than the results passing for music that I have just heard, I should be very strongly tempted to take an axe to it.

Let us look at what can, and has been, done with the gramophone amplifier, constructed by noteworthy designers, expressly intended for household entertainment.

Is it not possible for the film producers and makers of sound apparatus, with all their vast resources in the matter of finance and brains, to bring into the cinema quality at least equal to that of home equipment?

Hounslow. C. HARDINGHAM.

New Apparatus Reviewed

Recent Products of the Manufacturers

MAGNUM MULTI-CONTACT SWITCH

THE multi-contact switches made by Burne-Jones and Co., Ltd., Magnum House, 296, Borough High Street, London, S.E.1, have hitherto been fitted with pear-shaped cams which did not allow any one set of contacts to remain closed in two or more positions, the contacts opening momentarily, then closing as the next position came into action.

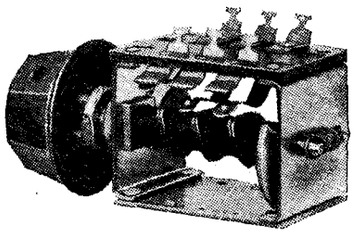

Magnum three-position wave-change and filament switch for battery sets.

A new shape of cam is now being fitted which obviates this momentary opening and closing of a contact, such as that for filaments, etc., when changing from one to another position of the switch.

The model illustrated is a wave-change two-pole make-and-break model incorporating a pair of filament contacts, these having the new shaped cam. It is a three-position type, and costs 2s. 6d.

B.A.T. LINE RESISTOR

THE majority of the U.S.A.-made mains receivers are designed for 110 volts supply, and when these are used in this country where the supply voltages are mainly between 200 and 250 volts, either a series resistance or a step-down transformer, according to the type of set, must be interposed between the receiver and the power point.

Claude Lyons, Ltd., 40, Buckingham Gate, London, S.W.1, has introduced a variable resistance for use where this method of absorbing the surplus voltage can be employed.

It is rated to dissipate about 85 watts, and will carry indefinitely 0.5 amp. without an undue temperature rise. The resistance wire is wound on a heat-resisting former, and adjustment for value is made by sliding along a metal band, which, when the correct resistance for the particular set has been determined, can be clamped securely in position.

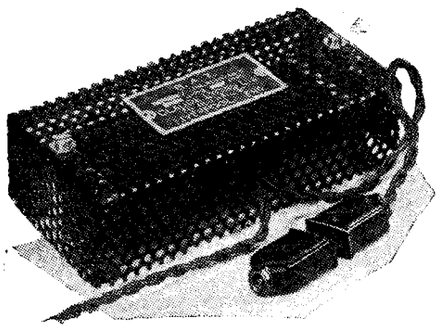

Claude Lyons' B.A.T. variable line resistor for 110-volt mains receivers.

The resistance is protected by a perforated metal cover, and input and output leads are fitted, the former terminating in a standard 5-amp. two-pin plug, whilst the latter has an American-type flat-prong two-pin plug and socket adaptor.

The resistance element is of very generous size, having a large area for heat dissipation, and it is exceptionally well made and finished. The standard model has a resistance of 350 ohms and costs 12s. 6d., but non-standard sizes can be obtained for 15s. each.

BULGIN QPP OUTPUT CHOKE

THIS new component of A. F. Bulgin & Co., Ltd., Abbey Road, Barking, Essex, has been designed especially for use with QPP output valves in which both sets of electrodes are assembled in the one bulb, such as the Marconi and Osram QP21 and the Hivac QP240.

It is wound on an iron core of adequate size, and has a total inductance of 27 henrys, its DC resistance being 320 ohms.

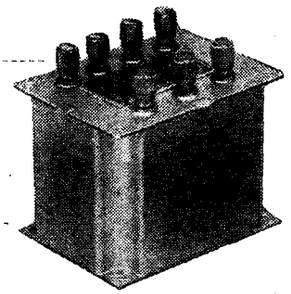

Bulgin LF31 tapped QPP output choke.

The winding is tapped at the exact centre, and in addition further tappings are provided for matching loud speakers of 7,500 ohms and 10,000 ohms impedance.

It is enclosed in a frosted aluminium case designed for baseboard or sub-chassis mounting; insulated terminals are fitted, and the price is 15s. The list number is LF31.

When tested in a circuit the choke was found to be perfectly satisfactory, and we can confidently recommend it.

CHALLIS TELEVISION MAINS TRANSFORMER

CHALLIS TRANSFORMERS, LTD., 41, King Edward Road, Rugby, has sent in for examination a mains transformer designed for use in exciter units for cathode ray tubes.

This model would be rated at approximately 50 watts output; it gives 3,000 volts RMS for the HT rectifier, and it has a taping at 2,000 volts for tubes requiring the lower potential.

There are two 4-volt LT windings, each rated for 4 amps. On full load these two windings gave 3.85 and 3.91 volts respectively, whilst with 3-amp. load their voltages were 3.93 and 3.99 RMS.

The high voltage secondary was only a shade over 2,000 volts in one case and 3,000 volts in the other, with a slightly greater current load than the 5 mA. for which it is rated.

In the case of this winding, one end is joined to frame, whilst the tapping and the other end of the winding are taken to porcelain pillars to ensure adequate insulation in view of the high potentials at these points.

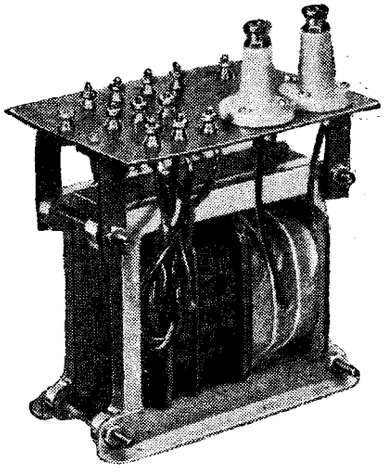

Challis high-voltage mains transformer for cathode ray tube exciter units.

This scheme of connections is quite satisfactory, for the transformer will be employed with a half-wave rectifier.

The primary is tapped for mains supplies of 200 to 250 volts at 50 c/s, and the price is fixed provisionally at 45s.

The Radio Industry

THE H.M.V. London showrooms are in course of reconstruction; from the technical point of view the arrangements being made for demonstrations promise to be exceptionally interesting, as the architect has planned, in collaboration with the engineers, a system of independent built-in aerials connected to a series of sound-proof rooms.

As most readers are aware, Milnes H.T. supply units are ordinarily arranged for recharging from a 6-volt accumulator, to which the cells are connected by means of the charge-discharge switch in parallel groups of four. The system is, however, a flexible one, and for the benefit of those who have available sources of higher DC voltage it may be pointed out that batteries are available for charging from 12-volt accumulator (e.g., a car battery) and from house-lighting or similar plants of from 18 to 110 or even higher voltages. Possibilities in this direction are clearly set out in a leaflet available from Milnes Radio Co., Ltd., Victoria Works, Bingley, Yorks.

A recent paragraph regarding Chrysler cars may have given a false impression. The makers do not fit any particular car radio equipment to their models, and buyers of the cars have complete freedom of choice as to the type selected.

New loose-leaf sheets are available for inclusion in Section 7 (Communication Engineering Instruments) of the catalogue issued by Muirhead and Co., Ltd., Elmers End, Beckenham, Kent.

Mr. Leslie S. Smith has resigned his position as sales manager of Sunbeam Electric, Ltd., and has been appointed general manager of Sunbeam Wireless Service, of 10, The Pavement, Clapham, London, S.W.4.

FOUNDATIONS OF WIRELESS

By A. L. M. SOWERBY, M.Sc.

Part XXVII.—The IF Amplifier : Filters

THE selectivity and quality of the modern superhet. are both governed largely by the characteristics of the IF amplifier ; these in turn are determined by the nature of the band-pass filters which are its most important components. This instalment deals at length with the behaviour of coupled circuits of the types customarily employed.

THE intermediate-frequency amplifier can be defined as that part of a superheterodyne that lies between the frequency-changer and the second detector. It is really a fixed-tune high-frequency amplifier which derives its signal not from the aerial direct, but from the frequency-changer, since this is the point at which the IF currents first appear. Just as in the case of the HF amplifier, our present problem consists largely of the design of the tuned circuits involved.

At the comparatively low frequencies used, tuned-circuit design is much easier than at the original signal-frequency in the sense that it is easier to produce coils of low resistance—or, more properly, of high L/r ratio. As we have clearly seen (Part XX), it is this ratio that determines the sharpness with which a circuit tunes. We can therefore expect to make a superheterodyne more selective than a "straight" set with the same number of tuned circuits.

The two most-used intermediate frequencies are 450 and 110 kc/s, or values not far removed from these. Experience shows that the values of L/r set forth in the table below can be achieved, even with comparatively small coils, with the various types of winding indicated. The figures make rough allowance for the damping effects of valves and other components connected, in the finished set, across the tuned circuits.

Frequency (kc/s).	Type of Coil.	L/r.
450	Solid wire, air core	25 to 30 $\times 10^{-6}$
450	Litz., air core	40 to 50 ,,
450	Litz., iron core	70 to 80 ,,
110	Solid wire, air core	50 to 60 ,,
110	Litz., air core	Up to 140 ,,

Those who remember earlier Parts will realise that these figures are necessarily approximate, rising or falling with the physical dimensions of the coil. In addition, they depend on the value of L, growing less as this is increased owing to the fact that the series resistance r equivalent to dielectric loss or other forms of parallel damping is proportional to the *square* of the inductance.

A Typical Example

It is not easy, unless one is very familiar indeed with the implications of these figures, to draw any immediate conclusions from them. We will therefore assume that we are called upon to design the IF coils for a superheterodyne that includes one stage of IF amplification. A typical circuit for the relevant part of the receiver is given in Fig. 141, where it will be seen that each of the two IF couplings includes two tuned circuits, making four in all. One at each point would suffice to provide the necessary coupling between valves, but as we know (Part XX) that the larger the number of tuned circuits the better the compromise between selectivity and high-note reproduction, this minimum is doubled.

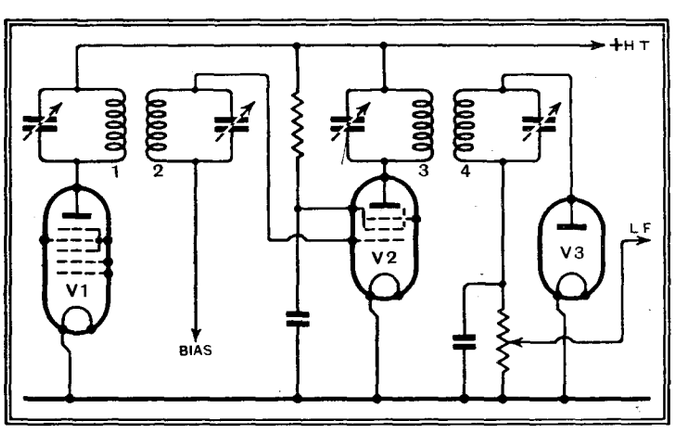

Fig. 141. Skeleton diagram of single-stage IF amplifier. V1 is the frequency-changer, V2 the IF amplifying valve proper, and V3 the detector.

To get an idea of the meaning of the L/r values just given, we will draw two overall resonance curves for four *cascaded* tuned circuits, one curve corresponding to circuits of $L/r = 140$, and one to circuits of $L/r = 25$, these being the highest and lowest figures in the Table. The curves, drawn from the data-curves of Fig. 108 (Part XX), are reproduced in Fig. 142.

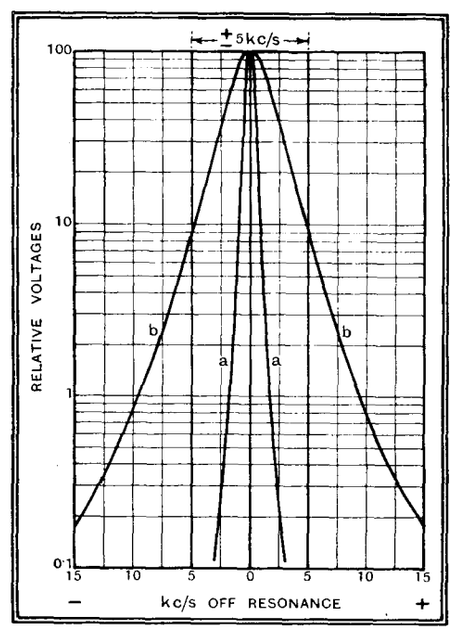

Fig. 142. Overall resonance curves of four tuned circuits in cascade. (*a*) $L/r = 140$. (*b*) $L/r = 25$.

Selectivity—at a Price

The inner one, corresponding to $L/r = 140$, shows the most impressive selectivity—but also shows the most appalling loss of high notes. At 3 kc/s off tune (3,000 cycles audio) the response is little more than one-thousandth of that corresponding to the carrier (and the lowest notes).

The outer curve, corresponding to $L/r = 25$, is more reasonable, being nearly 100 times down at 9 kc/s; selectivity will be good, while at 5 kc/s (5,000 cycles audio) the response is still one-tenth of that for the bass. Even this curve, if realised in a receiver, would give very "boomy" and deep-toned reproduction of music, badly lacking in the life-giving high notes.

Foundations of Wireless—

The curves of Fig. 142 have been worked out on the assumption that the tuned circuits are in cascade, by which is meant that each retains its own individual

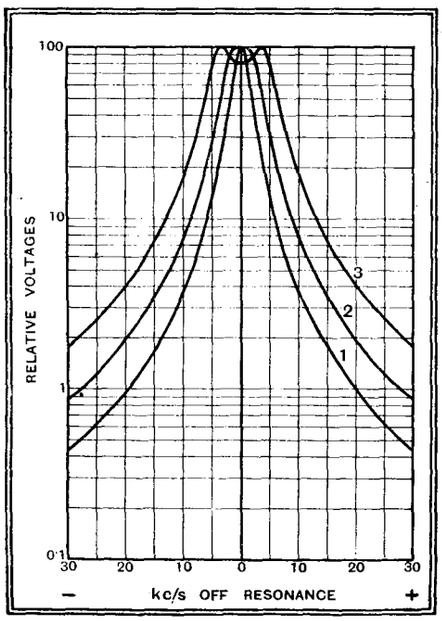

Fig. 143. Resonance curves of two tuned circuits, each $L/r = 40$. (1) Cascaded : $X/r = 0$. (2) Critically coupled $X/r = 1$. (3) Coupled to give overall band-width ±5 kc/s. $X/r = 2.04$. (See formula 5.)

resonance curve, unmodified by the presence of the others. But to pass energy through the intervalve couplings of Fig. 141, some coupling has to be provided by which this energy can pass from circuit 1 to circuit 2, and from 3 to 4. Juxtaposition of the coils implies that this is done by mutual inductance, the second coil lying in the magnetic field of the first. The process is analogous to that by which energy is transferred from an aerial to a tuned winding by coupling to the latter a few turns of wire connected between aerial and earth. But in the present case there is a difference—*both* circuits are tuned to the frequency of the currents supplied to them.

In such a case each circuit reacts upon the other, and each modifies the other's resonance curve. There emerges a new joint resonance curve, with characteristics that we have not yet discussed.

Let us take the case of two tuned circuits (one intervalve coupling in Fig. 141), each of which has $L/r = 40$. If the coupling between them is very weak, so that the reaction of one circuit upon the other is negligible, we get, for the two circuits in cascade, the innermost resonance curve 1 of Fig. 143. This shows a reduction of voltage to 19 per cent. at ±4 kc/s from resonance, and to 4.5 per cent. at ±9 kc/s. The weak coupling further ensures that even if a large voltage appears across the first coil, that across the second will be extremely small.

Maximum Energy Transference

As the coupling between the two coils is increased by bringing them closer together, the voltage across the secondary increases and the peak of the resonance curve broadens, until at *critical coupling* the curve takes the shape shown at 2 in Fig. 143. The response at ±4 kc/s has now risen to 44 per cent., thereby improving the transmission of high notes, but at the cost of a reduction in selectivity, the response at ±9 kc/s now being 9.4 per cent. At this coupling the voltage across the secondary is half that which would appear across the primary used as simple tuned-anode coil.

With still closer coupling the voltage, at exact resonance, across the secondary begins to fall a little, while the joint resonance curve takes on the shape shown at 3. The rounded peak of curve 2 has now split up into two separate peaks with a trough at the actual resonant frequency itself. The response at ±4 kc/s is now 98 per cent. of the maximum, while at ±5 kc/s it is equal to that at exact resonance. Selectivity has necessarily dropped further, the response at ±9 kc/s having risen to 23 per cent.

It would appear that curve 3 offers a suggestion for a very satisfactory design. It provides a rising response up to 5 kc/s from resonance, thereby compensating for probable losses in other portions of the receiver, while at the same time giving selectivity which, by using a large enough number of pairs of circuits, might be made sufficiently high. In practice it is found that resonance curves of this type are very hard to realise, for differences in the L/r values of the two circuits generally lead to a curve in which one peak, being predominant, is brought exactly to resonance, while the other is represented by no more than a slight irregularity on one side or the other of a steeply falling curve. On the whole, it is safest for a designer to content himself with trying to get a peak only a little wider than that of curve 2, which represents the case of critical coupling and maximum gain.

A pair of coils, coupled so as to broaden the peak of the resonance curve in the way shown in Fig. 143, is called a *filter* or *band-pass filter*. More elaborate structures, containing more than two tuned circuits, can be built up, but in ordinary wireless practice the use of tuned filters is generally restricted to a simple two-member combination such as that described.

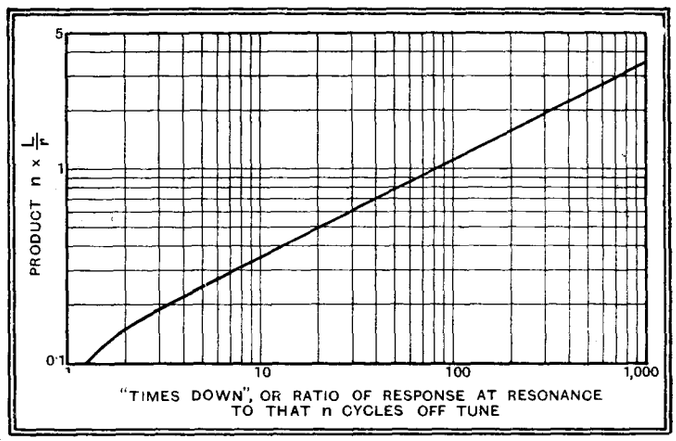

Fig. 145. Design-curve from which resonance curve of any critically coupled filter for which L/r of the coils is known may be plotted.

Controlling Band Width

We have seen that the resonance curve of a single tuned circuit is determined entirely by the ratio L/r. In a filter we have a second variable in the coupling between the coils, which determines the degree of "spread" round the peak. This coupling may take several forms, of which the most usual are shown in the diagrams of Fig. 144. If we denote by X the reactance of the coupling element (Cm, Lm, or the mutual inductance M), then the effect of the coupling in modifying the resonance curve from that proper to the same to circuits in cascade depends upon the ratio X/r. If, therefore, we know the sharpness of tuning of the individual circuits, as given by L/r, and also the effect of coupling, as given by X/r, we can plot the complete resonance curve of a filter. The formula necessary for this is given at the end of this Part.

Without, however, going so far as to plot the whole curve, we can fairly readily find out some important points. Two circuits are critically coupled when the coupling is so close that the peak of the curve

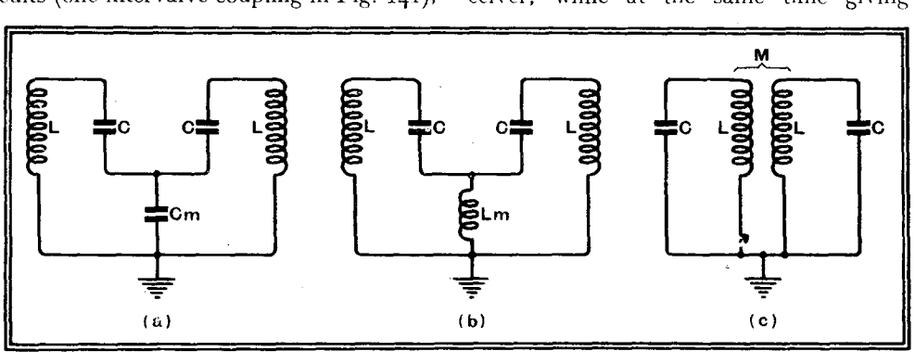

Fig. 144. Three common types of tuned filter. Coupled in (a) by Cm, common to both tuned circuits ; (b) by Lm replacing Cm ; (c) by mutual inductance M between the coils themselves.

Foundations of Wireless—

is just on the verge of breaking up into two separate peaks. This occurs when the coupling reactance X is made equal to the high-frequency resistance r of either of the circuits (assumed identical), or when the *relative coupling* X/r is made equal to unity. Naturally, the higher r is made the broader will be the peak, since raising r flattens the tuning of each individual circuit and at the same time involves an increase in X to maintain coupling at the critical point. A rapid estimate of the width of the peak can be made by dividing L/r for the circuits concerned into 0.15, which gives the number of cycles off tune at which the response has fallen to half that at resonance.

Thus for two circuits of $L/r = 50$, critically coupled, the curve would fall to half-height at $0.15/(50 \times 10^{-6}) = 150{,}000/50$ cycles $= 3.0$ kc/s off tune. Data for plotting rapidly a complete resonance curve for the particular case of critical coupling are given in Fig. 145. Here "times down" at n cycles off tune is plotted against the product $n \times L/r$, the latter being in fundamental units (cycles, henrys and ohms). The curve applies to the simple case where the two tuned circuits are identical; in the case of any difference between them an approximation at least could be had by taking a mean value for L/r. This figure fulfils for a filter what the design curves in Part XX do for circuits in cascade.

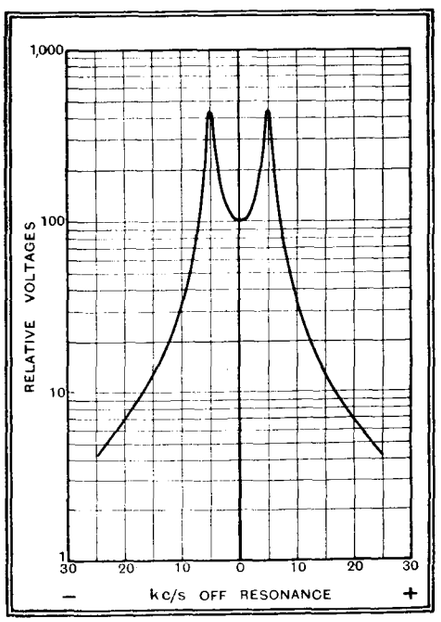

Fig. 146. Showing how "rabbit's ears" develop when an attempt is made to broaden the peak by closely coupling coils of high L/r. $L/r = 140$. $X/r = 79$ (formula 2).

In the third (peaked) curve of Fig. 143 there are two peaks at about $3\frac{1}{2}$ kc/s either side of resonance. A curve of this type is just as easy to plot from the full formula as one for critical coupling, but short cuts are less simple. Owing to the difficulty of realising such curves, we will do no more than refer the reader to formulæ, at the end of this Part, which give the number of cycles off tune at which the peaks occur, their height, and the number of cycles off tune at which the final fall of the curve outside the peak

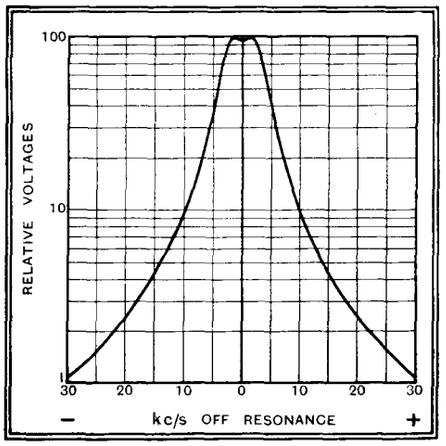

Fig. 147. Resonance curve of filter suggested as suitable for IF amplifier of Fig. 141. $L/r = 40$. $X/r = 1.25$.

brings the response down again to equal that at resonance.

Attention is particularly drawn to the impossibility of combining a flat-topped curve with high selectivity by closely coupling a pair of very low-resistance circuits. Fig. 146 shows the curve of a filter in which each circuit has $L/r = 140$, coupled to give peaks at 5 kc/s off tune. Apart from the fact that the tuning of each circuit reacts upon that of the other to such an extent as to make the realisation of the curve a matter of extreme difficulty, the great height of the peaks will lead the user of the finished superheterodyne so to tune his oscillator as to put the IF carrier, not in the trough, where signals will be quietest, but on one of the peaks, where the output of sound will, in the case shown, be twenty-five times as great.

We will suppose, therefore, that in supplying coils to the amplifier of Fig. 141 we shall content ourselves with a low L/r ratio and a relative coupling little tighter than critical. This will give us a curve that is not too selective for acceptable quality while keeping away from practical difficulties in tuning. Suitable values are $L/r = 40$, $X/r = 1.2$ to 1.3, which give us (for one filter) the curve of Fig. 147. This is practically flat to $2\frac{1}{4}$ kc/s off tune, after which it drops away to a little less than half-height at ± 5 kc/s. At ± 9 kc/s it is nearly ten times down. Two such filters in cascade will give a resonance curve typical of that of the IF amplifier of the average modern superheterodyne.

The gain to be expected from the IF stage is very readily calculated. Since it depends on the dynamic resistance $\omega^2 L^2/r$ of the tuned circuits, it can (theoretically) be raised to any desired value by choosing a sufficiently high value for L, of course keeping L/r constant at the chosen value. Let us suppose that the intermediate frequency is 110 kc/s, and that with an IF valve of slope 2.5 mA/V. we want a gain of 250 times from grid of IF valve to grid of detector. Since the coupling is close to the critical value the gain from grid to anode of the coil, over one coil only, will have to be almost exactly double this figure, making 500 times. Dividing this by the slope of the valve gives the dynamic resistance required for the anode coil, which is, therefore, 200,000 ohms. Knowing that $L/r = 40 \times 10^{-6}$, and $2\pi f L^2/r = 200{,}000$ ohms, we readily deduce that L must be 10.5 mH., bearing in mind that $f = 110$ kc/s. This inductance we shall have to tune with $199\mu\mu$F., including strays.

If the pentagrid has a slope of 3 mA/V., the conversion conductance will be 1.5 mA/V., giving a gain of about $(200 \times 1.5)/2 = 150$ times, reckoning from HF on modulator grid to IF on grid of IF valve. Since this, in turn, amplifies 250 times, the overall gain from signal on grid of pentagrid to second detector will be 250×150, or about 37,500 times.

APPENDIX.

Filter Formulæ.

The **resonance curve** of a filter is given by:

$$\left(\frac{Vo}{V}\right)^2 = \left(1 - \frac{158n^2p^2}{1+q^2}\right)^2 + \left(\frac{25.2np}{1+q^2}\right)^2 \quad .. \quad (1)$$

where Vo = voltage at resonance
V = voltage at n cycles off tune
p = L/r (in henrys and ohms)
q = relative coupling X/r, or ratio of coupling reactance to coil resistance.

Critical Coupling occurs when $q = 1$ (see Fig. 144).

This gives maximum voltage on second coil, this voltage being half that which would have appeared on the first coil had it been the only one used. Still closer coupling reduces voltage but little.

Peaked Curves. (q greater than 1.)

If peak is n cycles from resonance,

$$q^2 = 1 + 158p^2n^2 \quad .. \quad .. \quad .. \quad (2)$$

and height of peak is given by:

$$\frac{V}{Vo} = \frac{1+q^2}{2q} \quad .. \quad .. \quad .. \quad .. \quad (3)$$

(Use by finding q, by formula (2), from known L/r and desired n; then find V/Vo from formula (3).)

Approximate short cut in a single stage: height of peak n cycles out from resonance is given by:

$$\frac{V}{Vo} = \frac{158n^2p^2 + 3}{4} \quad .. \quad .. \quad .. \quad (4)$$

Overall Band-width.

If it is desired that, at n cycles from resonance, the peak shall have been passed and the voltage shall have fallen again to the level of the trough at resonance, make:

$$q^2 = 1 + 79p^2n^2 \quad .. \quad .. \quad .. \quad (5)$$

The rest of the curve can then be sketched by finding n for peak from (2) and height of peak from (3).

CATALOGUES RECEIVED

Midgley Harmer, Ltd., Dukes Road, Western Avenue, London, W.3, have developed a new condenser microphone and three-stage pre-amplifier, particulars of which are contained in a recently published leaflet. The new microphone is of extremely small dimensions and should cause little distortion of the sound field at high frequencies.

Full technical details, including a frequency response curve, of the new Magnavox "Thirty-Three" loud speaker are given in a booklet published by Benjamin Electric, Ltd., Brantwood Works, Tariff Road, Tottenham, London, N.17. The specification of the Model "Sixty-Six" is also included.

The Wireless World
THE PRACTICAL RADIO JOURNAL
25th Year of Publication

No. 829. FRIDAY, JULY 19TH, 1935. VOL. XXXVII. No. 3.

Proprietors : ILIFFE & SONS LTD.

Editor :
HUGH S. POCOCK.

Editorial,
Advertising and Publishing Offices :
DORSET HOUSE, STAMFORD STREET,
LONDON, S.E.1.

Telephone: Hop 3333 (50 lines).
Telegrams: "Ethaworld, Sedist, London."

COVENTRY : Hertford Street.
Telegrams: "Autocar, Coventry." Telephone: 5210 Coventry.

BIRMINGHAM :
Guildhall Buildings, Navigation Street, 2.
Telegrams: "Autopress, Birmingham." Telephone: 2971 Midland (4 lines).

MANCHESTER : 260, Deansgate, 3.
Telegrams: "Iliffe, Manchester." Telephone: Blackfriars 4412 (4 lines).

GLASGOW : 26B, Renfield Street, C.2.
Telegrams: "Iliffe, Glasgow." Telephone: Central 4857.

PUBLISHED WEEKLY. ENTERED AS SECOND CLASS MATTER AT NEW YORK, N.Y.

Subscription Rates :
Home, £1 1s. 8d. ; Canada, £1 1s. 8d. ; other countries, £1 3s. 10d. per annum.

As many of the circuits and apparatus described in these pages are covered by patents, readers are advised, before making use of them, to satisfy themselves that they would not be infringing patents.

CONTENTS

	Page
Editorial Comment	49
The Modern Quality Receiver	50
Current Topics	54
A New Idea in Short-wave Amplification	55
Good Old Days Again ?	57
Universal Test Meter	58
Listeners' Guide for the Week	62
Philco Model 98 Reviewed	64
Broadcast Brevities	66
Letters to the Editor	67
Radio Data Charts. VI.	68
Foundations of Wireless. XXVIII	70

EDITORIAL COMMENT

Electrical Interference

A Disgraceful State of Affairs

THE Post Office, despite its avowed policy of giving the utmost service to the public, is failing in a responsibility to wireless listeners.

It is years now since attention was drawn by *The Wireless World* to the growing nuisance of electrical interference which mars the enjoyment of broadcast programmes.

In November, 1932, *The Wireless World* suggested that the Institution of Electrical Engineers should call a committee to consider what steps should be taken to reach agreement between the various electrical interests, so as to pave the way for legislation on the subject of interference. At that time it could not be foreseen that that body would fail so lamentably in carrying out the task which it voluntarily undertook. After nearly three years it looks as if the only achievement of the Committee has been to fight a very successful rearguard action against the wireless public in defence of the electrical industry which has been unwilling to admit any responsibility for interference and has resented the idea that it should be called upon to introduce remedial measures.

It goes much against the grain to state the position so bluntly, but what other conclusion can we arrive at when the years go by and nothing is done. So long, too, as the I.E.E. Committee exists, so long will it be impossible for the Post Office to act themselves because they have representatives on the committee.

In November, 1932, Sir Ian Fraser in the House of Commons asked the Postmaster-General if, in view of the recent demonstration by the Post Office at the National Radio Exhibition that practically all kinds of electrical interference with wireless reception can now be inexpensively prevented, he will take the first opportunity of securing power to enforce the reasonable use of interference-preventing apparatus ?

In reply it was stated that such legislation "will be considered."

What has happened since then is that all sorts of people have found that the problem is beset with difficulties, but we venture to suggest that most of these are of their own intentional invention.

It has been argued that before legislation could be effective, it would be essential to define precisely what degree of interference should be regarded as offensive. When we experience direct sound nuisances from our neighbours, do we have to set up apparatus to measure the sound before we can take any action? Surely the Post Office engineers are competent to decide in such matters. Yet we find that in the case of electrical interference, elaborate methods of arriving at a measure of the interference are being evolved and argued about as if legislation could not be proceeded with in the absence of some such agreed formula.

It is high time that the bare problem should be looked at again, dissociated from all the frills which have accumulated around it and that the representatives of the Post Office should resign from the I.E.E. Committee, so that the Post Office may be free to introduce a simple Bill making unreasonable interference illegal and giving the Post Office authority to control it.

Surely the electrical industry will not say that they have not been given both the time and opportunity to offer to the Postmaster-General an agreed plan. They have been shown every consideration and have failed to produce results. There is now every justification for the Postmaster-General to take the matter into his own hands.

The Modern Quality Receiver

By W. T. COCKING

Latest Developments Applied to the Superheterodyne

IN the following article all the essential improvements available for inclusion in the design of a modern superheterodyne are listed and discussed from a technical point of view. It will be found that all these desirable refinements have been incorporated in the design of the "'Wireless World' 1936 Monodial A.C. Super" to be described in next week's issue

THE standard of performance demanded from a wireless receiver is continually becoming higher, and both constructor and purchaser grow more exacting. A few years ago a highly sensitive and selective set giving moderately good quality was considered ideal, and many could see little scope for improvement. The receiver of to-day, however, must be in no way inferior as regards sensitivity and selectivity, and it must give a much closer approach to perfection in the matter of quality of reproduction; in addition, automatic volume control is considered an essential fitting, with a visual tuning indicator hardly less so, while quiet automatic volume control is becoming quite important in a really sensitive set.

The specification of an up-to-date receiver, therefore, reads somewhat as follows:—

(1) Sensitivity adequate for distant reception with a poor aerial (about 10μV).

(2) Selectivity commensurate with the sensitivity.

(3) Quality as high as possible in all circumstances, leading to (a) a minimum of amplitude distortion, (b) for local reception an even response up to 8,000 c/s.

(4) A minimum of internally generated background noise.

(5) Freedom from spurious responses (second-channel interference and the like).

(6) AVC system designed for fading reduction.

(7) Efficient muting between stations, i.e., QAVC.

(8) Visual tuning indicator which is both rapid and dead beat, while in addition such important factors as reliability, ease of adjustment, consistency of performance, and cost must receive attention.

Such a performance is best secured with a superheterodyne, and the requirements in regard to selectivity and quality **can be met only by including variable selectivity,** as explained in detail in a recent article.[1] It was pointed out therein that this is best obtained at an intermediate frequency of some 465 kc/s, but this would not force us to employ this frequency if it were not that it is advantageous from another point of view. The elimination of second-channel interference, and most of the kindred whistle-producing types of interference, depends upon the provision of an adequate degree of pre-selection, and the higher the intermediate frequency employed the easier it is to obtain the requisite pre-selection.

It is common to find that when the intermediate frequency is of the order of 110 kc/s, two tuned circuits preceding the frequency changer provide sufficient selectivity for the avoidance of spurious response except when the receiver is employed within a few miles of a transmitter. The strong signals from a local station can be responsible for many whistles, and to overcome them it is necessary to use at least three tuned circuits at the signal frequency or else to employ very efficient coils with highly accurate ganging, and probably also special balancing arrangements, which are liable to be tricky in adjustment.

Now, if we use an intermediate frequency of 465 kc/s, each pre-selector circuit affords roughly four times the protection against second-channel interference, so that with two signal-frequency circuits the liability to spurious responses is something like one-sixteenth of that at 110 kc/s. With coils of average efficiency two pre-selector circuits with an intermediate frequency of 465 kc/s are roughly equivalent to four with a frequency of 110 kc/s.

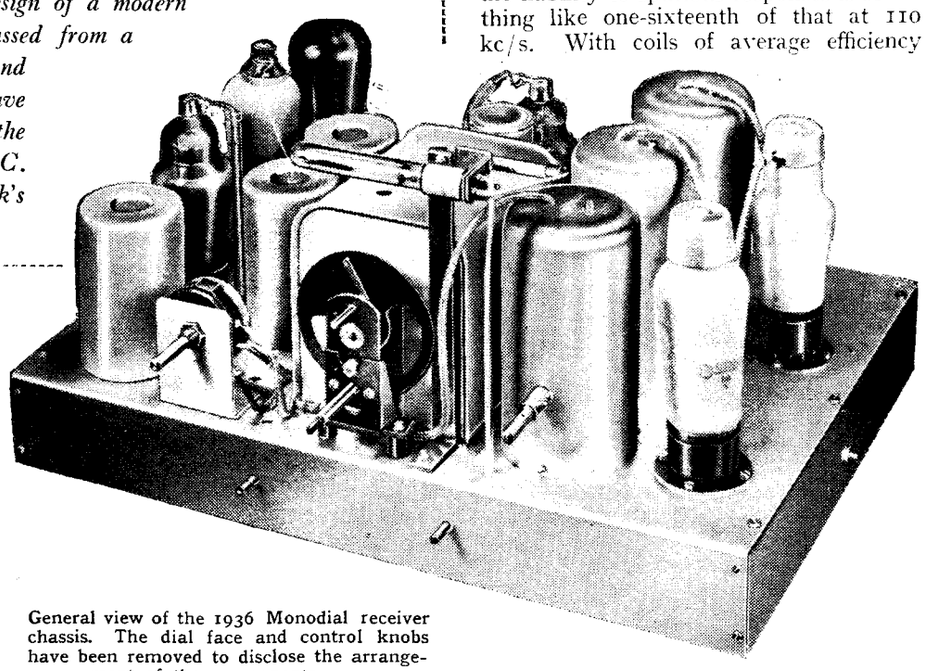

General view of the 1936 Monodial receiver chassis. The dial face and control knobs have been removed to disclose the arrangement of the components.

Each additional signal-frequency circuit employed adds to the complication of a receiver, and makes its adjustment more difficult, and if it be possible to obtain the desired performance with two circuits it is not desirable to employ a larger number. Two circuits with an intermediate frequency of 465 kc/s prove in practice to meet present-day requirements admirably.

[1] Variable Selectivity. *The Wireless World*, July 5th, 1935.

The Modern Quality Receiver—

If we decide to employ two circuits there are two different ways in which they may be used: they can be connected in the form of a band-pass filter coupling the aerial to the frequency-changer, or they may be used as two single circuits with a signal-frequency HF amplifier.

Our choice here will depend upon the sensitivity which we need, for although we can obtain as much amplification as we like at the intermediate frequency, background hiss is a matter of great importance. The noise generated in a receiver comes from various sources. Thermal agitation in the conductors forming the first circuit sets a limit to the maximum usable amplification, but in many cases valve noise predominates. There are many defects in a valve which can lead to noise, but assuming such defects to be absent, the signal to noise ratio increases as the ratio of the square root of the anode current to the mutual conductance. It is obvious that we need only consider the first valve, for if the signal and noise in this stage are comparable in strength, the noise introduced by the second stage will be negligible.

Now, the conversion conductance of a frequency-changer is considerably lower than the mutual conductance of an HF valve, and its anode current is rarely much smaller. The conversion conductance normally obtained is about 0.5 mA/V, whereas the mutual conductance of a modern HF pentode is some 3 mA/V, or even more. The use of an HF stage preceding the frequency-changer is thus likely to increase the signal to noise ratio by some five or six times—an increase which is well worth while.

IF Stage Gain

If we are wise we shall not attempt to obtain a high degree of amplification from such a stage, and shall content ourselves with a modest gain of some 20 times, for unless we do this we shall be liable to meet trouble with overloading of the frequency-changer when receiving stations separated from a local by only a few channels. We shall find, therefore, that a higher degree of IF amplification is needed than might at first be thought necessary. At a low frequency it would readily be possible to secure adequate amplification with a single IF stage, for stability is easy to achieve at such a frequency, and four tuned circuits provide adequate adjacent channel selectivity. At 465 kc/s, however, six tuned circuits are needed, and adequate amplification cannot then be secured with a single stage. If stability is to be maintained with two high-gain IF stages, very extensive screening and decoupling is essential, and the resulting amplification is far higher than is necessary. It proves better, therefore, to employ two stages giving only a moderate gain of some 30 to 40 times per stage with which it is by no means difficult to obtain complete stability. A total IF gain of about 1,000 times is easily realisable in this way and compares very well with the figure of 400 times, which is about the best that can be obtained with a highly efficient single stage.

Our receiver now takes shape as a signal-frequency HF stage with two pre-selector circuits, a frequency-changer, and two IF stages embodying six circuits tuned to 465 kc/s and providing variable selectivity. The detector will naturally be a diode and this portion of the set with the LF amplifier need not differ in any way from normal practice. The AVC system must receive careful consideration, however. The use of DC Amplified AVC is usually inconvenient and is open to the objection that the characteristics may change appreciably with different valves. IF Amplified AVC does not have these drawbacks, but increases the risk of instability in a set having a high gain; moreover, since the amplification is at the intermediate frequency it might just as well be included in the chain leading to the detector. We thus find that special amplification for the AVC circuit is not strictly necessary, **provided that the last IF stage is not controlled.** If this stage be controlled, it will inevitably overload on a strong signal and serious distortion will result. The HF, FC, and first IF stages, however, can be fully controlled without any danger, for the 1st IF valve will never have to give an output exceeding about 0.5 volt. The second IF valve may have to give an output of 30 volts or so on a strong signal, and this is impossible at a high grid bias.

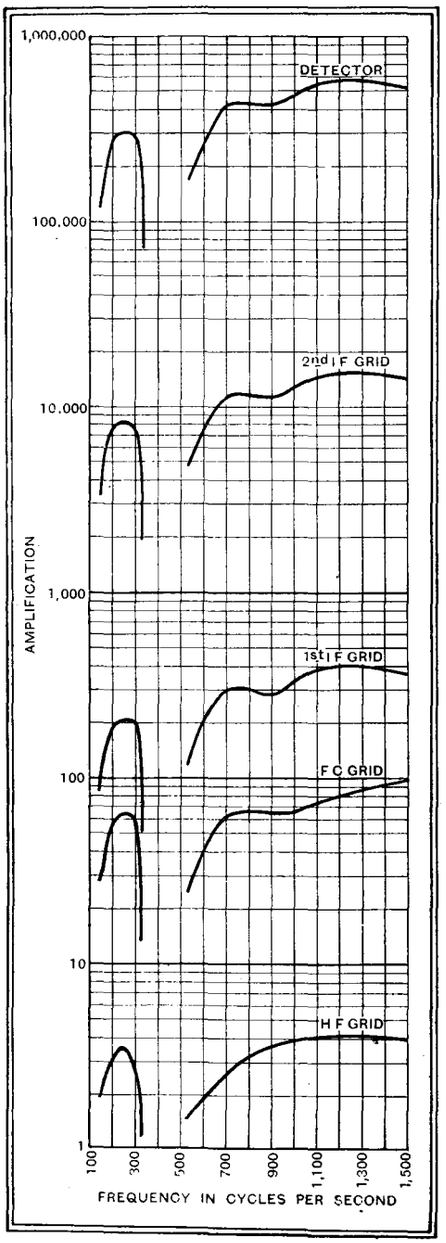

This illustration shows how the amplification varies throughout the *Wireless World* 1936 Monodial AC Super. The bottom curves show the gain from the aerial to the grid of the HF valve while the next gives the amplification as far as the frequency-changer. The difference in shape between this curve and the next is accounted for by the variations in conversion conductance of the frequency-changer with frequency, and as the gain of IF amplifier is effective at all frequencies this represents the final shape. It will be seen that the pre-detector gain reaches a figure of over half a million and that the variations in the gain with frequency are unusually small.

Delay Voltage for AVC

The question of the delay voltage employed is of great importance, and it can be shown theoretically that the higher the delay voltage the better the action of AVC, provided that the sensitivity is adequate. The use of a large delay voltage, however, results in the last IF valve being called upon to deliver a very high output voltage and it is difficult or impossible to obtain a valve which will give the necessary output without distortion. Practical experience, therefore, shows that the use of a small delay voltage, or even none at all, leads to much better results. A local-distance switch usually becomes unnecessary and with normal degrees of fading the control is aurally as good. The volume from different stations may vary slightly more, however, but this is unimportant in view of the differing degrees of average modulation depth employed, which prevents equal volume being obtained from all stations whatever the AVC system.

Now, any highly sensitive receiver which is equipped with AVC is very noisy when it is **not** tuned to a signal, for the sensitivity is then at its maximum and full output is secured from atmospherics and man-made static. Tuning, therefore, is apt to be a noisy process, and some means of automatically reducing the sensitivity when the set is mistuned from a signal is highly desirable. Many highly complex QAVC systems have been evolved, but although entirely satisfactory from a theoretical standpoint, they are often expensive and very difficult to adjust correctly without laboratory apparatus. A simpler system which involves the use of only one additional valve has consequently been evolved, and although it has not all the features of more complex systems it has proved in practice to be 90 per cent. as good.

The additional valve is arranged to bias the detector so that it is inoperative in the absence of a signal having a level greater than a certain predetermined

The Modern Quality Receiver—

value. This valve is controlled from the AVC system of the receiver and when a strong enough signal is tuned in the detector bias is removed and the set functions normally. Tuning is then rendered much pleasanter, particularly at times when few stations are operating, for the receiver is silent except when tuned to a station.

The accuracy with which tuning is carried out affects the quality of reproduction to no small degree, and as many find difficulty in determining the optimum setting by ear, a visual indicator is considered necessary in the modern receiver. The simplest form of indicator is a milliammeter, but unless a good quality, and hence expensive, instrument is used, it does not greatly help tuning, for the needle oscillates so that it is difficult to determine its reading, and even if it can be persuaded to remain steady by careful tuning, any stray atmospheric is liable to set it swinging again. The neon tuning indicator does not suffer from the same defects, and as it has a more pleasing appearance, it forms a more suitable fitting to a high quality receiver.

It will thus be clear that the modern receiver demands far more skill on the part of the designer than older sets, not merely because a more exact performance is demanded, but because so many extra refinements are included. Every additional circuit embodied naturally increases the possibilities of a breakdown and this must be offset by a more accurate design and a more careful choice of the component parts.

In Next Week's Issue

The *Wireless World* 1936 MONODIAL AC SUPER

THE requirements of selectivity and quality are mutually incompatible, and it follows that any receiver having a fixed degree of selectivity is necessarily a compromise, the quality being lower than it need be for local reception and the selectivity hardly adequate to suit the needs of the most distant stations. The precise compromise adopted varies in different receivers, but compromise is inevitable unless the set is so designed that the selectivity can be varied at will to suit the particular receiving conditions existing at any moment.

Variable Selectivity and QAVC

The 1936 Monodial AC Super includes variable selectivity in a very effective form, with the result that although a very high standard of quality can be obtained when required, the selectivity can be increased at will by means of a single panel control when interference renders this necessary. The sensitivity is of a very high order, being less than 10μV, and is consequently adequate for distant reception even when the aerial is not of the best, moreover, the high sensitivity renders the AVC system efficient in reducing fading whether the average signal input to the set be high or low.

Through the use of an intermediate frequency of 465 kc/s second channel interference and kindred whistle producing forms of interference are much less prevalent than is the case with a low frequency, and under all ordinary conditions of use the possibility of their presence is negligible. A simple but effective QAVC system is incorporated which acts to eliminate the noisy background so often found when tuning receivers including automatic volume control. The signal level at which the system operates is adjustable to suit local conditions of background.

The valves are arranged as a signal-frequency amplifier, a triode-hexode frequency changer, two IF stages, and a low-frequency amplifier resistance coupled to the output pentode. Diodes are used both for the detector and for AVC, while a separate triode provides the muting action of QAVC. The panel controls are few in number and, apart from the wave-change and radio-gramophone switches, comprise only the tuning, the selectivity, and the manual volume controls.

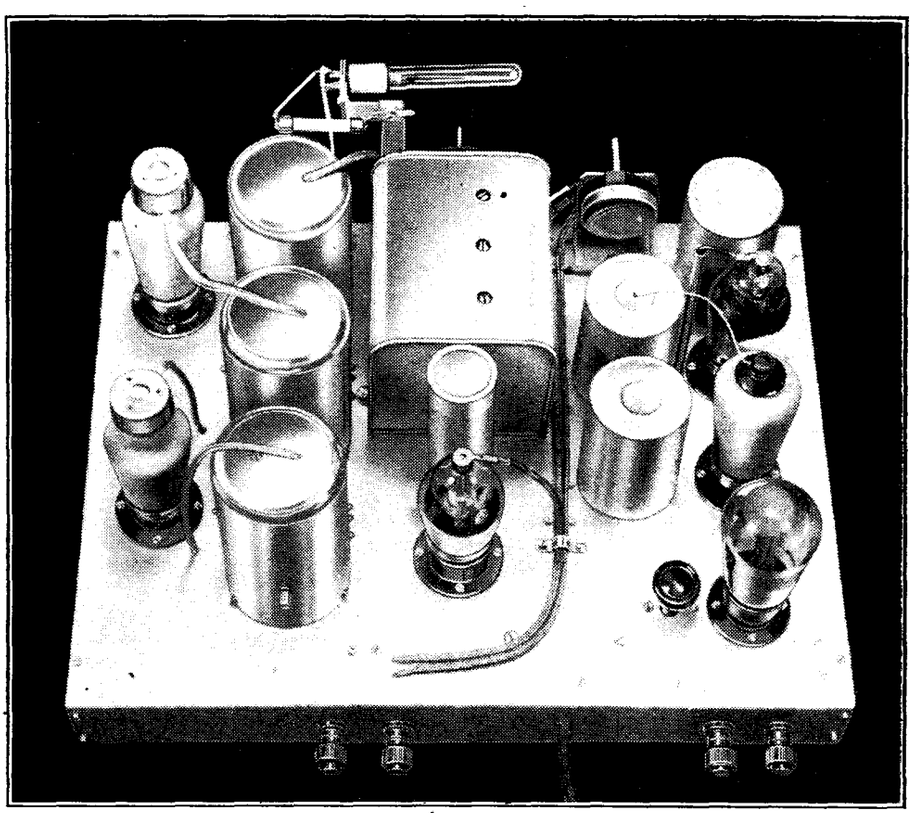

The top of the *Wireless World* 1936 Monodial receiver unit. Only where necessary have connections been carried above the chassis.

LIST OF PARTS

After the particular make of component used in the original model, suitable alternative products are given in some instances.

RECEIVER UNIT

1 Three-gang condenser, 0.0005 mfd. (J.B., Utility)	Polar "Minor"
1 Tuning dial assembly and drive (Polar)	Formo "Snail"
3 Variable-selectivity IF transformers, 465 kc/s	Wearite WW/IFT
1 Aerial coil	Bulgin C6
1 HF transformer	Bulgin C7
1 Oscillator coil, 465 kc/s	Bulgin C59
4 Valve holders, 7-pin	Clix Chassis Mounting Type
1 Valve holder, 5-pin	Clix Chassis Mounting Standard Type
1 Valve holder, 9-pin	Clix Chassis Mounting Standard Type
1 6-way Connector (Belling-Lee)	Bryce
1 5-way Cable with twin 70/36 leads (Goltone)	Harbros
1 5-pin Plug (British Radio Gramophone Co.)	Bulgin P3
1 Neon tuning indicator, 4-pin base	Cossor 3184
1 Holder for above	Bulgin VH25
4 Ebonite shrouded terminals, A, E, Pick-up (2)	Belling-Lee "B"
1 Screened valve connector	Bulgin P64
1 Screened valve connector	Bulgin P65
1 Screw-on valve adaptor	Bulgin P68
5 SPST switches	Bulgin S80B
2 SPDT switches	Bulgin S81B
2 Lengths of rod, 9in. and 11in., for above	Bulgin
2 Knobs	Bulgin K14B
2 Knobs	Bulgin K16B
2 Reducing sleeves for above	Bulgin
1 Tapered volume control, 1 megohm (Ferranti, Claude Lyons, Magnum, Rothermel)	Reliance GLT
1 Potentiometer, 10,000 ohms (Kabi, Watmel)	Haynes Radio
1 Potentiometer, 50 ohms	Kabi Hum Balancer

1936 Monodial AC Super—

Fixed condensers

2 0.0001 mfd. tubular	T.C.C. 300
1 0.015 mfd. tubular	T.C.C. 300
11 0.1 mfd. tubular	T.C.C. 250
1 0.0001 mfd.	T.C.C. "M"
3 0.0002 mfd.	T.C.C. "M"
2 0.0005 mfd.	T.C.C. "M"
2 50 mfds. 12 volts, electrolytic	T.C.C. "AT"
1 2 mfds. 200 volts, electrolytic	T.C.C. 561
1 8 mfds. 460 volts peak, electrolytic	T.C.C. 802

(Dubilier, Ferranti, Graham Farish, Peak, Polar-N.S.F., T.M.C. Hydra)

Resistances, 1 watt

1 100 ohms	Dubilier
1 500 ohms	Dubilier
3 2,000 ohms	Dubilier
1 8,000 ohms	Dubilier
3 10,000 ohms	Dubilier
2 20,000 ohms	Dubilier
2 30,000 ohms	Dubilier
4 50,000 ohms	Dubilier
1 100,000 ohms	Dubilier
1 250,000 ohms	Dubilier
1 1 megohm	Dubilier
2 2 megohms	Dubilier

Resistances, 2 watts

1 2,500 ohms	Dubilier
1 7,000 ohms	Dubilier

Resistances, 3 watts

1 7,000 ohms	Dubilier

(Amplion, Bryce, Erie, Ferranti, Graham Farish, Claude Lyons, Polar-N.S.F., Watmel)

2 Hammarlund double trimmers	**Rothermel STD220**
3 Stand-off insulators	**Bulgin SW45**

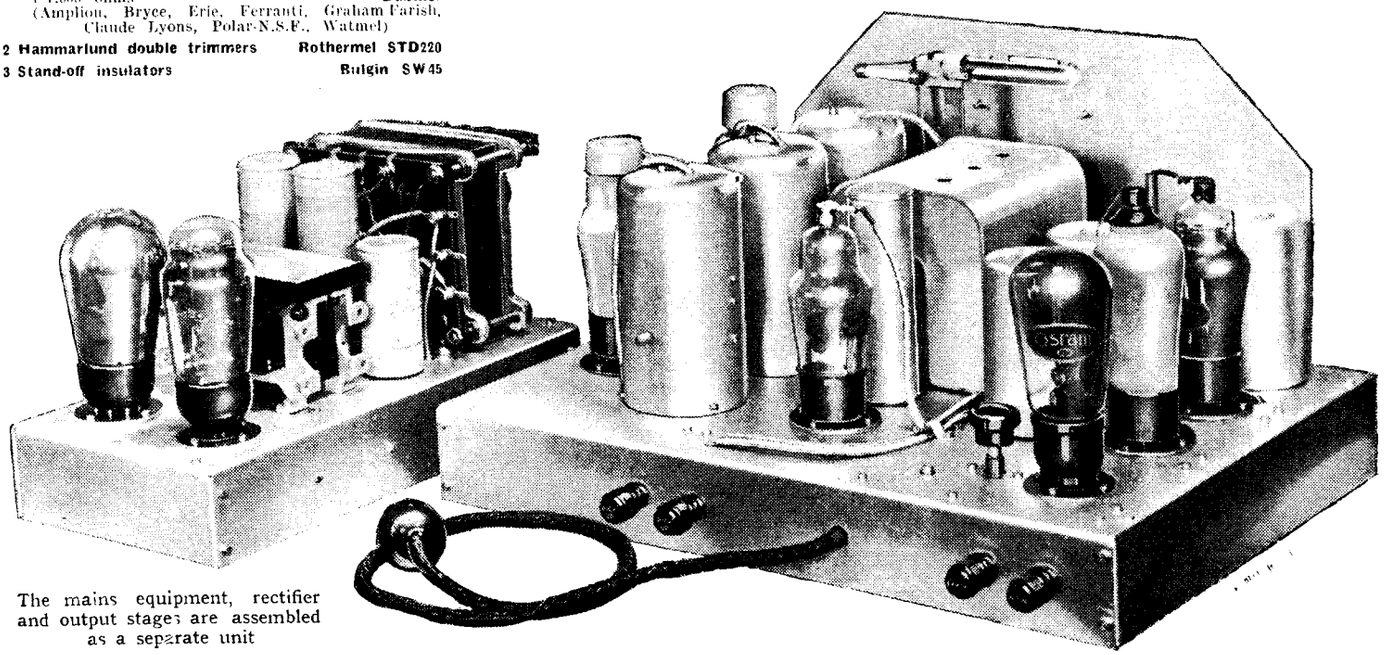

The mains equipment, rectifier and output stages are assembled as a separate unit

2oz. No. 16, 2oz. No. 20 tinned copper wire, 12 lengths Systoflex, etc.

5 Lengths screened sleeving — **Harbros**

Metal chassis complete with screws, nuts and washers — **C.A.C.**

Valves: 2 VMP4, 1 X41, 1 WD40, 1 MHD4, 1 ML4 — **Osram**

(Marconi)

POWER UNIT

1 Valve holder, 7-pin	**Clix Chassis Mounting Type**
3 Valve holders, 5-pin	**Clix Chassis Mounting Standard Type** (Belling-Lee)
1 5-pin Plug	**Bulgin P3** (British Radio Gramophone Co.)

1 Mains transformer with screened primary — **Challis**
Primary; 200/250 volts, 50 cycles. Secondaries; 350-0-350 volts 120 mA., 4 volts 2.5 amp. C.T., 4 volts 6/7 amp. C.T., 4 volts 2 amp. C.T.
(B.S.R., British Radio Gramophone Co., Bryce, Heayberd, Claude Lyons, Parmeko, R.I., Rich and Bundy, Sound Sales, Varley, Vortexion, Wearite)

1 Smoothing choke — **Davenset 106**
(Alternatives same as Mains Transformer above)

Fixed condensers

1 0.1 mfd. tubular	T.C.C. 250
1 50 mfds. 50 volts, electrolytic	T.C.C. 521
1 4 mfds. 460 volts peak, electrolytic	T.C.C. 802
2 8 mfds. 460 volts peak, electrolytic	T.C.C. 802

(Dubilier, Ferranti, Graham Farish, Peak, Polar-N.S.F., T.M.C. Hydra)

Resistances, 1 watt

2 100 ohms	Dubilier
1 100,000 ohms	Dubilier

(Amplion, Bryce, Erie, Ferranti, Graham Farish, Claude Lyons, Polar-N.S.F., Watmel)

2oz. No. 16, 2oz. No. 20 tinned copper wire, 6 lengths Systoflex, etc.

Metal chassis complete with screws, nuts and washers — **C.A.C.**

Loud speaker, 1,250 ohms field resistance and transformer for N41 valve — **W.B. Type EM/W**

Valves: 1 N41, 1 MU14 — **Osram**

(Marconi)

NEW BOOKS

The Measurement of Inductance, Capacitance and Frequency. By Albert Campbell and Ernest C. Childs. Pp. xxiv+488. Macmillan and Co., St. Martin's Street, London, W.C.2. 30s. net.

This is a most valuable work of reference which can be thoroughly recommended to all wireless experimenters who are in search of information concerning low-frequency measurements. The senior author, Mr. Albert Campbell, formerly head of the Electrical Measurements Division of the National Physical Laboratory, is well known as a pioneer in the field of alternating current measurements. He is a very skilful experimenter, and, what should appeal to readers of *The Wireless World*, he has carried out important researches in a private laboratory which he built with his own hands and with the use of apparatus which was almost exclusively home-made. He designed the fundamental standard of inductance now in use at the National Physical Laboratory, a massive piece of apparatus weighing a hundredweight or so, and constructed of statuary marble; his own private standard is wound on a jam jar. All this is by the way, but it provides some indication of what may be expected from this book. It is authoritative, and within its range complete and up to date. Its scope is considerably wider than the title might suggest, although radio-frequency measurements are not treated in any great detail. The standard methods of measurement are described and a short account of some recent work is given, but it is for low-frequency measurements that it will be found most valuable. In this field it is probably more complete than any existing book. There are, for example, four chapters dealing with the AC potentiometer, one of these being devoted to phase-splitting circuits. More than twenty frequency-meters are discussed; and there are valuable chapters concerning the construction and testing of transformers for measurement purposes of all kinds. These are in addition to the more obvious chapters on the construction and measurement of condensers and inductances, which the title of the book suggests. The descriptions are throughout clear and concise. There is more mathematics in the book than a purely practical man will like, but it is as elementary as it is possible to make a thorough treatment of the subject. L. H.

Photo-Electric and Selenium Cells: The Operation, Construction and Uses. By T. J. Fielding. Pp. 140 and 74 illustrations. Chapman and Hall, Ltd., 11, Henrietta Street, London, W.C.2. Price 6s.

The science of photo-electricity naturally lends itself to experimental work of a most interesting and fascinating character, and many keen amateurs are following up the subject. The book under review is written especially to meet the needs of those experimenters who have as yet only a limited knowledge in this direction. It is couched in simple language and deals in a practical way with the action of photo-cells and with a wide range of applications, including television, industrial applications, advertising, talking pictures, etc.

Chapter XII, which makes interesting reading, is entitled "Ingenious Applications," and describes a number of applications less widely known than those dealt with in other chapters. O. P.

BLUE PRINTS

For the convenience of constructors full-sized blue prints are available of the following popular **Wireless World** sets that have been fully described for home construction, price 1s. 6d., post free.

AC Short-wave Converter. (Two-range unit covering 13.5-50 metres.) **April 12th and 19th, 1935.**

Permeability Battery Four. (Long-range receiver with two HF stages.) **May 24th and 31st, 1935.**

QA Receiver. (AC Four-valve HF and detector unit designed to work with Push-pull Quality Amplifier.) **Feb. 8th and 15th, 1935.**

Push-Pull Quality Amplifier. (AC resistance-coupled double push-pull designed for the finest quality of reproduction.) **Feb. 22nd, 1935.**

These can be obtained from the Publishers, Iliffe and Sons Ltd., Dorset House, Stamford St., London, S.E.1.

Current Topics

Events of the Week in Brief Review

Pirates

THE Postmaster-General said in the House of Commons last week that during the first five months of this year 1,447 persons were convicted on the charge of installing or working wireless apparatus without the appropriate licence. He had no reason to think that the penalties laid down in the Wireless Telegraphy Act, 1904, were inadequate.

Listeners' Strike

THE threatened strike of Norwegian listeners has collapsed. It will be remembered that listeners threatened to abandon their receivers if the announcers persisted in using what is regarded as an archaic mode of speech. Unfortunately for the strike committee, however, it has not been possible to obtain the 25,000 signatures which had been hoped for. The strike is "off" indefinitely.

Broadcasting for Papua

PAPUANS will shortly enjoy the Australian broadcasting programmes through the medium of a 100-watt relay station to be erected at Port Moresby, operating on 221 metres. The station will be erected and operated by Amalgamated Wireless (Australasia), Ltd.

A Visit to Cossors

MEMBERS of the London Chapter of the International DX'ers Alliance are visiting the Cossor works at Highbury on Thursday next, July 25th. Further particulars may be obtained from the hon. secretary, Mr. H. M. Blaber, 9, Stanton Road, West Wimbledon, S.W.20.

Television : A German View

THERE can be no better bridge of peace between the peoples of the world than television, according to Herr Hadamovsky, director of German broadcasting, in a broadcast talk on July 9th from all German stations. He appealed for an exchange of television experience between Great Britain and Germany.

Herr Hadamovsky said that Paul Nipkow's invention of the Nipkow Disc in 1884 was equal in importance to that of Gutenberg in relation to modern printing. Discussing recent developments, he considered that the British had proceeded with German thoroughness, while the Germans had developed the British gift of improvisation.

Sponsored Programme

THE depths of banality were reached by a French station the other day in a programme sponsoring a new moth killer. As a musical background to the sales talk a gramophone record played Chopin's Funeral March.

Radio Posters

PRIZES of 3,000 and 2,000 francs are being offered by the Paris Société pour la Diffusion des Sciences et des Arts for posters in connection with the autumn wireless Salon. Competitors must be of French nationality.

American Woman Radio Engineer

THE challenge of Europe's women radio engineers has been taken up in America. Station KGIR, Butte, Montana, is distinguished by the touch of a feminine hand on the dial, the hand being that of Miss Barbara Sprague, who, in addition to her work at the controls, announces the women's hour programmes and conducts a theatre column of the air.

YET ANOTHER.—Miss Barbara Sprague, engineer and announcer at KGIR, Butte, Montana. She has been "in the game" since 1930, but is also a good cook.

Miss Sprague secured a second-class telegraph operator's licence from a Washington radio college in 1930. After acting as chief engineer and manager of the Illinois station she went to Kentucky, and two years ago obtained her present berth. Her fellow engineers appreciate the fact that she is also a good cook.

How Germans Listen

GERMAN licences totalled 6,589,454 on July 1st. This number included 458,213 licences issued free of charge.

A Polyglot Station

WHICH is the most truly polyglot station in Europe? Huizen and Moscow give talks in a large number of languages, and Italy is also developing its services in this direction. It is believed, however, that Stuttgart holds the palm, as its evening broadcasts are given in English, French, German, Spanish, Italian, Dutch and Polish.

A Radio President

M. IGNATIUS MOSCICKI, the re-elected President of the Polish Republic, is famous as an electrician. His achievements include the improvement of the Leyden Jar and the development of the condenser. A large number of Moscicki condensers are employed at the Eiffel Tower broadcasting station.

Old Wireless Sets

LISTENERS discarding old sets in favour of new ones are appealed to by the Manchester and Salford Society for the Provision of Wireless Sets for the Bedridden Poor, which equips local hospitals with receiving apparatus. Persons wishing to help are asked to communicate with the Hon. Secretary, Mr. J. A. Boyle, 17, Alton Street, Queen's Park, Manchester.

Transatlantic Television

ACCORDING to Dr. C. B. Jolliffe, chief engineer of the American Federal Communications Commission, it is doubtful whether Europe is really ahead of the United States in television development (writes a Washington correspondent).

Recently the engineer of the Commission visited the television laboratories of R.C.A., Philco, and Farnsworth. The three laboratories are working on different standards. Each has, or will have, an experimental visual broadcasting station with sound accompaniment, but only laboratory receiving sets will be able to tune in the pictures. A campaign is now afoot to get the competing laboratories to combine to the extent that the same standards may be available on which outside experimenters can work.

The R.C.A. 343-line pictures at 60 frames per second cannot be picked up by a Philco receiver nor can a Philco transmission be tuned in with instruments now produced by the Farnsworth concern.

That the American radio industry has its eyes focused on the new art is indicated by the recurrence of trade names in which the word "television" is introduced. It is now the "Blank Radio and Television Company" in the case of several large manufacturers who formerly refused to countenance any mention of television.

From Canada comes the report that W. H. Peck is testing 120-line mechanical scanning apparatus in Montreal.

No More Cold ?

WHEN broadcasting and the weather are mentioned in the same breath it is usually in order to blame the former for the latter. In Sweden, however, a writer praises radio for its beneficent influence on the climatic conditions of last winter, which was unusually mild, asserting that it was perfectly natural that the atmosphere should be warmed up, having regard to the amount of electric current (*sic*) forced into the air by the broadcasting stations.

Not Good Enough

CAUSTIC criticism of Irish Free State broadcast programmes has now reached the Dail, and several Deputies have been urging the need of improved programmes.

The Free State has only twenty licences per thousand population as compared with 151 per thousand in Denmark and 138 per thousand in Great Britain.

The People's Set

FEARS that the German "People's Set," which is issued at a specially reduced price, would affect the sale of ordinary receivers have, to some small extent, been justified. In 1933 ordinary sets sold to the tune of 1,130,083, while 344,311 "People's Sets" were sold. In 1934, it is revealed, the sale of ordinary sets was 1,042,521, whereas 811,619 "People's Sets" were sold.

A New Idea in Short-wave Amplification

An Unusual Circuit Using a Screen-grid Valve

THE new system of HF amplification described in this article is particularly suitable for the short-waves and furthermore, enables a useful gain to be obtained at those very high frequencies where the more usual forms begin to fail. This scheme might have, therefore, interesting possibilities on the ultra-short waves for television reception

IF a glass rod is rubbed with a dry silk handkerchief it will become "electrified" with a charge of positive electricity. In Fig. 1 such a charged glass rod is shown brought near to one end of a long metal conductor mounted on an insulating pillar. The positive charge on the glass rod exerts an attractive force on the electrons present in the surface of the conductor, and, being free to move within the limits of the conductor, these electrons accumulate at the end nearer to the rod, producing a negative charge at this end,

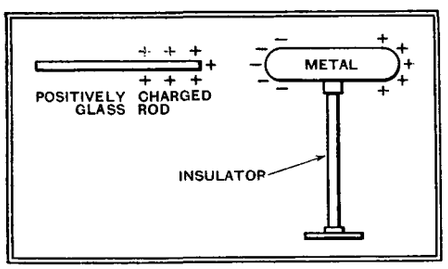

Fig. 1.—Simple experiment demonstrating electrostatic induction.

and, in consequence, an equal positive charge at the other. The total negative charge so produced will be of somewhat smaller amount than the positive charge on the glass rod, but will increase fairly uniformly as the rod is brought closer and closer to the conductor. Similarly, it will decrease in amount as the glass rod is withdrawn. If the glass rod is taken sufficiently far away the electron distribution on the conductor will be practically restored to its original uniformity. Clearly, if the rod is moved to and fro, up to the conductor and away again, there will be a corresponding to-and-fro motion of the electrons in the surface of the conductor. The motion of the glass rod will, in fact, produce an alternating current in the conductor. The process was originally known as "induction." Indeed, that is still the only existing name for it, though the term is more usually employed for the somewhat similar process whereby a current is produced in a conductor by means of the magnetic, as distinct from the electric, field.

The distinctive feature in the simple induction process described above is that a current is caused to flow in the conductor, not by the actual transference to it of electrons from some external source, such as a battery or a heated filament, but by the movement of a charge in the neighbourhood of the conductor.

Now consider a simple diode arrangement such as that shown in Fig. 2a. With a positive potential on the anode, the emitted electrons will travel straight from filament to anode, and will constitute the ordinary anode current. Suppose, however, that the electrons are emitted with a fairly high velocity and the anode is made negative with respect to the filament. Then the state of affairs will be somewhat as illustrated in Fig. 2b. That is to say, the repulsive force exerted on the electrons by the negative anode will retard the forward motion of the electrons down to zero velocity and then drive them back to the filament. The anode current will clearly be zero, and the nett current in the diode space will also be zero. There will, however, be a steady distribution of negative charge in the diode space, which will produce, by the process of induction described above, a corresponding (though not an equal) positive charge on the anode (superimposed, of course, on the existing steady negative charge on the anode due to the applied negative potential). Now suppose that in some way (for example, by means of an alternating radio-frequency EMF applied to some other electrode in the system) the amount of the charge in the diode space is made to vary. The induced

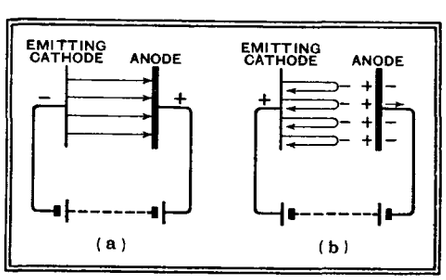

Fig. 2.—With a positive potential on the anode of a diode the electrons emitted from the filament travel as shown in (a), but if the anode is made negative the electrons are repelled and return to the cathode as in (b).

positive charge on the anode will vary in consequence, and in synchronism with the variation of the diode space charge, as in the analogous experiment described. This variation of the anode charge will be brought about by an alternating flow of current to and from the anode in the external circuit. The mean anode current will remain zero as before, but there will now be a superimposed alternating component of the given radio frequency, and, if the external circuit comprises a radio-frequency load or impedance, a corresponding radio-frequency voltage will thus be produced across this impedance by the variation of the diode space-charge, without the actual transference of electrons from the cathode to the anode.

This, portrayed in a somewhat crude and elementary way, is the essential mechanism of a new method of radio-frequency voltage amplification, particularly suitable for short wavelengths, which is described by C. J. Bakker and G. de Vries,

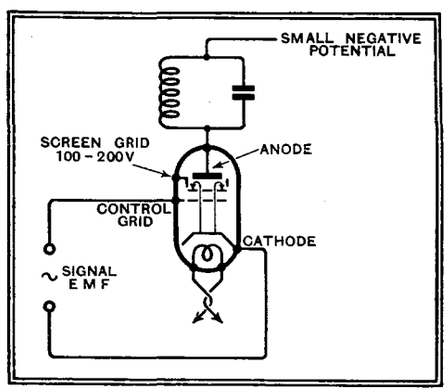

Fig. 3.—Circuit arrangement of a screen-grid valve for use as an H.F. amplifier on short waves as explained in the text.

of the Philips lamp factory, in a recent edition of the Dutch periodical "Physica." A tetrode valve is used, with normal control-grid bias, a fairly high positive potential (100-200 volts or so) on the screen grid, and on the anode a potential sufficiently negative to reduce the anode current to zero, giving electron paths of the form illustrated in Fig. 3. Under these conditions the screen-grid-anode space can be thought of as a diode in which electrons are emitted from the cathode (i.e., the screen-grid) with unusually high velocity, the amount of the emission being controllable, moreover, by means of an auxiliary electrode (the control grid). We thus have essentially the conditions postulated in reference to Figs. 2a and 2b, and if a suitable (i.e., high impedance) load is connected to the anode, an amplified reproduction of radio-frequency signal voltages applied to the control grid should be obtained across this load.

The theory of the subject, which is given fairly completely (though not very lucidly) in the paper referred to above, shows that the "induction" current will be proportional to frequency, and will be associated with an apparent internal resistance, located, in effect, in the screen-grid-anode

A New Idea in Short-wave Amplification—

space. These features are shown in Table I, which records calculated and measured values of amplification given by a tetrode valve with anode 1.5 cm. distant from the screen grid.

TABLE I.

Wavelength (metres)	6	15	25	50
Load impedance R_L (ohms)	7,000	15,000	40,000	125,000
Internal resistance Ri (ohms)	6,000	35,000	100,000	400,000
Amplification (calculated)	9	13	21	43
„ (measured)	8	15	20	42

It will be found that if the "induction" current is calculated from the above data on the basis that it is proportional to the quantity

$$\frac{R_L + R_i}{R_L R_i} \times \text{amplification}$$

it is, in fact, directly proportional to frequency. This feature makes the system particularly suitable for high frequencies, where the more usual forms of circuit tend to lose their effectiveness. Thus, at a wavelength of six metres, the induction current, calculated as above, is about 2.8 mA. per volt applied to the control grid, and the problem of getting a considerable amplification at this wavelength is reduced to that of securing a load circuit of sufficiently high impedance—a matter which was discussed at some length in a recent issue of this journal.[1]

Practical Tests

Another and rather surprising feature is that for a given load impedance at a given frequency the amplification increases with the distance between the screen grid and anode, assuming that the anode potential is so chosen that the electrons are turned back from close proximity to the anode, as shown in Fig. 3. This appears to be mainly due to a *decrease* of apparent internal resistance as this distance is increased, as shown in Table II (measurements at 25 metres).

(In the original paper, by the way, the distances are given as centimetres, but a comparison with Table I suggests that this is almost certainly a misprint for millimetres. A tetrode with screen-grid at a distance of 15 cm. from the anode would be, to say the least, rather special!)

In conclusion, the authors state that they have constructed a complete radio receiver embodying three stages of "induction" high-frequency amplification, and that it has been operated very satisfactorily at wavelengths between 15 and 50 metres. They imply, moreover, that direct coupling between anodes and succeeding grids is permissible and practicable in consequence of the negative anode potential—a very useful constructional feature. They are to be congratulated on having introduced, and thus far exploited, yet one more potentiality of the versatile tetrode—one which is likely to lead to further interesting developments and may find useful application to short-wave television.

[1] New Types of short-wave Tuned Circuits, pp. 290-292, *Wireless World*, March 22nd, 1935.

TABLE II.

Distance (millimetres)	3.2	6	9	12	15
Load impedance (ohms)	40,000	40,000	40,000	40,000	40,000
Internal resistance (calculated)	2,000,000	600,000	250,000	150,000	100,000
Amplification (calculated)	6	11	18	20	21
„ (measured)	7	11	16	21	20

Random Radiations

By "DIALLIST"

A Service Recorder

A SUGGESTION by a reader, who is a radio-service man, that there would be a wide field for a device automatically recording the number of hours that a set was in use seems to me to be an excellent one. I understand from the Editor that the letter will be published. For AC mains sets, at any rate, the design and construction of such a device should present few difficulties, since it could be made on the lines of an electric clock—or rather a cross between a clock and a speedometer. It would come into action only when the set was switched on, and its record of hours would be cumulative. A meter of this kind would be a boon both to the set user and to the manufacturer, for with it in use there could be no dispute about the number of hours that a set had been running. As it is, when a breakdown occurs within the guarantee period, the victim is always prone to believe that a set has hardly been used, whilst the service man is apt to hold quite different views on the subject. Quite apart from this it would enable paterfamilias to keep a record of the amount of work that the wireless set was called upon to do from week to week by himself and by members of the household.

B.B.C. Changes

ALL of the men who will take over the big jobs under the recent reorganisation at the B.B.C. are "live wires," but none of them can have a proper chance of showing what he can do unless the B.B.C. obtains a larger share of the receiving licence fees than it does at present. As matters now stand the Post Office and the income tax people engulf a considerable amount of the money, whilst a large proportion of what is left is assimilated by the Exchequer. The result is that the B.B.C. receives but 4s. 9d. out of the 10s. paid for each licence. It should have very much more, and it must do so if it is to make a real success not only of the Home and Empire programmes, but also of the high definition television service. One would think that a start might well be made by the remission of income tax paid, which last year amounted to well over £100,000. If the B.B.C. received, as it should, at least 7s. 6d. out of each 10s. it could give us all the year round programmes up to the Jubilee standard.

Wireless at Sea

THE recent enquiries into the losses of certain British merchant ships at sea have served to emphasise the vast debt that seamen owe to the invention of radio telegraphy. But for the presence of transmitting equipment the entire crews of every one of these ships would probably have perished. As it was, only one ship went down with all hands, for wireless was able to bring aid to the others in the nick of time. And even the crew of the ill-fated *Millpool* might have been saved had not the gale and terrific sea that were raging brought down the main-topmast and with it the transmitting aerial. The operator managed to rig up a makeshift aerial, but his signals were so weak that the two ships that were in the vicinity were unable to get bearings with their direction-finders for some little time. Thus it was that they arrived on the scene just a little too late to save the crew. The landsman hears about marine wireless chiefly when the newspapers report tragedies of this kind. He perhaps hardly realises how enormously wireless has helped to avert them. There is probably no ocean-going ship afloat that is ever out of range of one or other of the time signal transmissions which are a great help to navigation. On nearing the coasts of civilised countries use can be made of the radio beacons and of the direction finding services. Thus, even in the thickest weather ships are no longer blind when in narrow waters. Last, but not least, the gale warnings sent out by the great stations are of inestimable value.

On the Grand Scale

ONE of the best pieces of work done at the recent I.B.U. Conference was the adoption of a plan for international lectures which will be heard simultaneously in all of the twenty-two countries represented. The underlying idea is that each country should in turn provide a series of such lectures by its greatest men in fields such as science and art. They are to take place several times in the course of each year, and Great Britain has accepted the invitation to provide one series within the next twelve months. The language difficulty is, of course, a considerable one. Speakers in English, French and German might have fairly large audiences in any European country, but they could not hope to reach any but a comparatively small proportion of their possible hearers. Though the lectures will probably be given in one of these three languages in the first instance, it seems likely that translations in the "local" language will have to be broadcast if the great mass of listeners is to obtain the benefit of this important international movement.

The Good Old Days Again ?

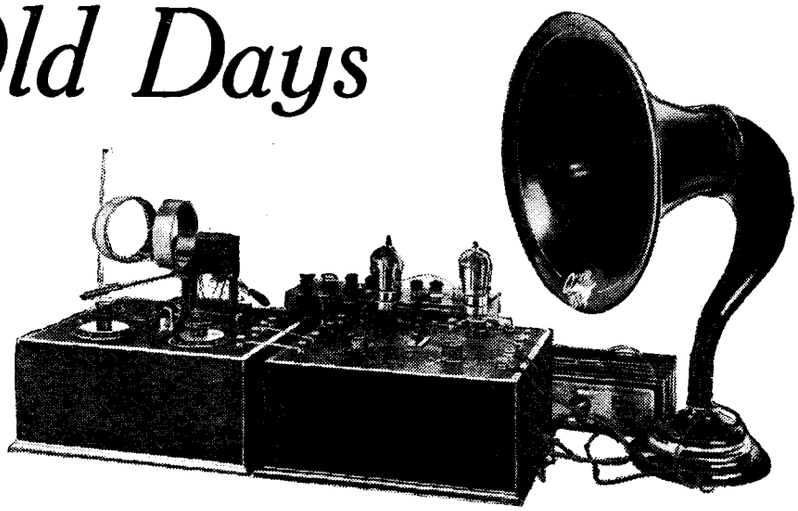

By "CATHODE RAY"

M. BLERIOT had much greater cause for satisfaction when he flew across the Channel twenty-six years ago than you have when you do it now, even though it be your first flight. In spite of that, the vast majority of those who go to Croydon for a trip across the water would be unlikely to accept an offer of Bleriot's original monoplane for the purpose. They would still stream into the vast thorax of the "Heracles."

Of the people who motor from London to Brighton in the course of a year, a few millions go by the most modern cars they can get hold of, because modern cars are very unlikely to conk out on the first hill or burst into flames; and a few dozen go by Old Crocks of Edwardian or even Victorian vintage, for the reason that any mutt can get there in a machine with synchromesh gears. The attraction of the historical models is the range of unpredictable experience that they open up.

A still smaller number of people do not go to Brighton or Southend or Blackpool at all; they go to Mount Everest or the Antarctic Continent simply because in those regions they stand more chance of arriving where no man has ever been before. This policy is diametrically opposed to that of the Brighton contingent, who would be disappointed to find no one there. Progress in flying or motoring or population may be either meat or poison. It all depends on the point of view.

Opposed to "Safety First"

There are the same two sorts of people interested in wireless. Perhaps wireless is distinguished by its large proportion of the explorer class. But there are still plenty who buy a receiver rather than make one because they like to know that there is a manufacturer's guarantee of reliability enclosed. And there are more people who send messages to the far corners of the earth via the great Post Office radio stations than those who try to get into touch through a home-made 10-watter. The former type of person becomes interested in a thing when it becomes entirely reliable. That is just when the latter loses interest in it.

The experimenter is lured by the fascination of the unknown. Fifteen years ago even the few professionals were rather hazy about wireless. And only scraps of their knowledge filtered through into readily obtainable print.

The amateur could work away, never knowing quite what was going to turn up next. He would find his messages, sent out on wavelengths that were confidently declared to have only a local range, picked up in America and Australia. One got a tremendous "kick" out of receiving dots and dashes and discovering from them that a cargo of bananas was being held up in a fog.

Building a set was not a matter of assembling a lot of components; one first had to design and make the components—cut the condenser vanes and turn the washers, solder together flash-lamp refills to make the HT battery, and wind the intervalve transformer with infinite care and patience as well as a mile or two of wire. There was nothing standardised about wireless sets in those days. But it was all very interesting.

Now the thing has become a factory product, designed to fractions of a penny by sordid commercialists. Simply to read through the continuous flow of published information would be a full-time job. To the Mount Everest type of experimenter this is anathema. He must have fresh-clean snowfields, undefiled by the foot of man. To him the field of radio is as inspiring as a football pitch after a season's play in bad weather.

The pioneer must always go into virgin country, where it is the unexpected that happens. Ordinary radio having become so densely populated, he has migrated to television, which still has unexplored areas. The real dark ages are already past, of course; but for a little while television may not be without interest even to the more fanatical experimenter.

Six-metre wavelength receivers are not yet turned out like sausages, at the end of a production line; one can still explore them quite pleasantly with the reasonable hope of discovering something new. Aerials, too; the last word has not yet been said on the subject of the best sort of ultra-short-wave aerial for domestic use. There are some very effective types of multiple aerial used for commercial systems, beam and otherwise; most of them a shade elaborate for home use; but something might be done along these lines in view of the relatively small dimensions needed at these wavelengths.

An ordinary broadcast-wavelengths quality-enthusiast has to face the apparently insoluble problem of selectivity. Ultra-short waves seem to leave one a clear field for developing high-quality reproductions, but what about stability and ease of control?

And there are other things to work at.

It is not an exact repetition of history, however. Television, after all, is only a newly opened-up tract of a large, well-known province. So, instead of being one of a small group, all starting from pretty nearly the same mark, the amateur experimenter is headed by a crowd of professional experts, working in well-equipped laboratories, with a solid foundation of accumulated information and experience on which to base their efforts.

The Question of Cost

At the equivalent stage in the broadcasting of telephony, valves were expensive enough—about 25s.—for what would now be considered fit only to send back to the makers; but, compared with iconoscopes and other paraphernalia of television, they were within reason.

There are other obvious drawbacks in television from the amateur pioneer standpoint. Though it is a timely outlet for the more violently adventurous spirits, it is no signal for a general abandonment of the field of sound reception and all that is associated therewith. While there are the individuals who challenge Everest and Antarctica, there are the thousands who find adventure nearer home. More profitable adventure for the most part, perhaps.

I, personally, cannot make myself believe that things will ever be nearly so thrilling as they were in the good old days of 1920. Older men (wirelessly speaking) think the same thing about 1910, or 1900. Those who are now young will doubtless look back wistfully at the good old days of 1935.

Universal Test Meter

Design and Construction of a Measuring Instrument Covering all Radio Requirements

By

ERNEST

M. MARTIN

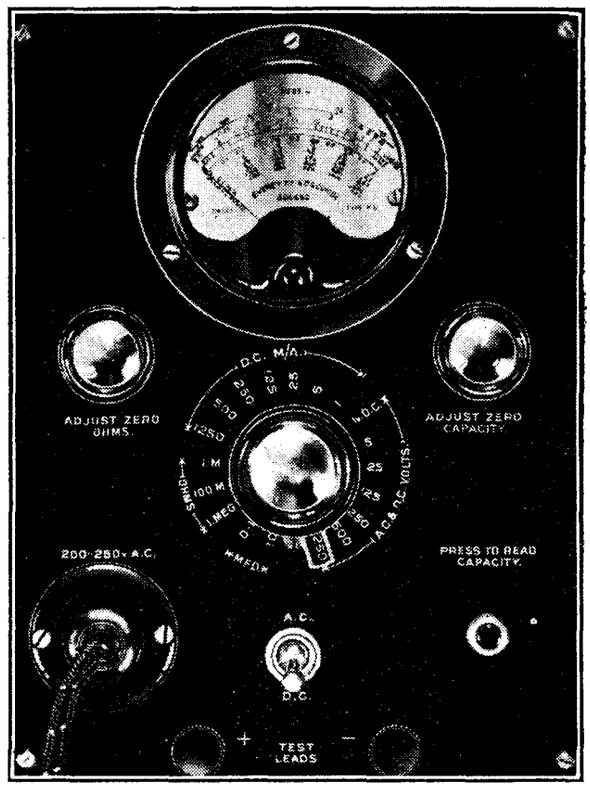

Front panel of the instrument. That of the original model described measures only 8in. × 6in.

THIS article shows how a versatile measuring instrument, capable of measuring an exceptionally wide range of voltages and currents, as well as resistance and capacity values, was built up by a reader with a single 0-1 mA. meter as a nucleus

IT is the purpose of this article to give data for the design of universal instruments, and, in particular, constructional details of a model having a reasonable degree of accuracy which has been made up and calibrated by the writer. The model to be described covers seven ranges of both AC and DC volts (1,000 ohms per volt), seven ranges of milliamps from 1 mA. to 1,250 mA., also three resistance ranges 0 to 1,000 ohms, 100,000 ohms, and 1 megohm, without external batteries. In the AC volts position the meter may be used for various output ranges without the need for isolating it from the receiver. Lastly, in conjunction with an AC supply of 200-250 volts, two ranges are available for testing condensers up to 10 mfds., a direct reading of capacity being indicated by the meter. In all there are 33 ranges covered by one rotary switch.

Most readers will already have a moving-coil meter of 0-1 mA. range, as this is necessary if accurate readings are to be expected, and it is required to know the internal resistance of the moving coil in order that our calculations can be made. This information is usually obtainable from the manufacturers of the meter. Assuming this resistance to be 180 ohms (which is the resistance of the meter used by the writer), it will be apparent that, in order to drop a voltage of 1 volt DC. a series resistance of 820 ohms is required to bring the total resistance to 1,000 ohms. Now, on the basis of 1,000 ohms per volt, it is a simple matter to calculate the various series resistances to be used for the other ranges required. Thus for the next range of 5 volts, a 4,000-ohm resistance is placed in series, and so on as shown in Fig. 1. As these resistances will be used for the AC volts ranges as well, they should be non-inductive, and may conveniently be the usual 1-watt carbon type of fairly low tolerance, say, ±5 per cent., or even 2 per cent. or lower if possible.

In order that the meter may be used for AC measurements, an instrument rectifier is required, and it is here that some unusual characteristics are observed. For instance, after connecting the rectifier in the circuit of an ordinary DC voltmeter, it may be found necessary to apply an AC voltage of 278 volts in order to obtain a full-scale deflection on the 250-volt range. Furthermore, an AC potential of 139 volts (being one-half of the above applied AC voltage) may not produce a corresponding half-scale deflection of the meter needle. It is obvious, therefore, that alternating-current values as indicated by the usual moving-iron type of AC meter will not be represented as having the same value when rectified and measured with a highly sensitive moving-coil instrument. This is because the moving-iron type of meter, which is insufficiently sensitive for modern requirements, has the desirable quality of indicating RMS (root mean square) values, whereas the sensitive moving-coil type indicates the average value, which is lower than the RMS value by a ratio of 1 : 1.11. This means that the indicated reading must be multiplied by 1.11 in order to obtain the correct result.

Another characteristic which must be taken into account is the current density of the instrument rectifier. This takes the form of an increase in the rectifier resistance with a decrease of the electrical load, and accounts for the departure from a linear scale in the usual commercial types of universal meter. The characteristic may be better understood by reference to the curves shown in Fig. 2, which give the RMS voltage drop expressed in millivolts using the Westinghouse instrument rectifier type MBS1.

Various manufacturers of universal meters have endeavoured to overcome these defects by the use of separate multipliers and an extra scale for the AC ranges. It will be appreciated that this method is expensive in view of the fact that the resistances must be non-inductive and extra space must be allowed for their inclusion in the instrument. Moreover, it is possible to cause serious damage to a meter of this description if DC is applied to the AC portion.

Now in order to minimise the effect of the current density characteristic of the instrument rectifier, a condenser is used in the model under discussion as a series reactor for the low range instead of the usual resistance. It will be seen from Fig. 3 that this constitutes an impedance circuit in which the capacitive reactance is 90° out of phase with the meter and rectifier resistance, which is represented by the

Universal Test Meter—

short side of a right-angled triangle. The impedance which is obtained by dividing 5,000 by the form factor of 1.11 is shown by the hypotenuse, and, of course, the third side represents the reactance, and we find from the formula $X = \sqrt{Z_2 - R_2}$ that the reactance is approximately 4,350 ohms. As will be noticed from Fig. 3, slight variations of the resistance side will have little effect on the length of the hypotenuse, whereas the variations of the total circuit resistance would be considerable if the elements of the circuit were added and represented by a straight line. For example, let us suppose that a 4,500-ohms resistance is used in series for the 5-volt AC range. Reference to the graph in Fig. 2 gives the voltage drop at half-scale reading as approximately 700 mV., which represents an internal resistance of about 1,300 ohms. The resistance at full-scale reading approximates to 950 ohms, so that there is an increase of 305 ohms, or 6.6 per cent. of the total resistance. Now, if the resistance side of our impedance circuit is increased by a similar amount of 305 ohms, the length of the hypotenuse is only increased by 86 ohms or 1.8 per cent., and it becomes apparent that the use of a condenser as a reactor enables us to obtain readings that conform very closely to uniform scale distribution. To continue, we now obtain the value of the condenser to be used from the reactance formula, which is $X = \frac{10^6}{2\pi fC(\text{mfd.})}$.

It is here that a point arises as to the frequency at which the instrument will be operated, and it is assumed that this is the usual 50 cycles, which is being generally adopted as the standard periodicity. If, however, the frequency used is 25 cycles, the capacity will need to be doubled, and in the case of 100 cycles the capacity should be half that shown. This can easily be arranged, if required, by the inclusion of series-parallel switching, but has been omitted from the model under discussion. The standard 50 cycles having been decided on, in this case the capacity of the condenser required is found to be approximately 0.75 mfd. This should really be variable, so that when a known voltage of 5 volts AC is applied, the capacity can be adjusted to give a full-scale deflection. As there is no available variable condenser of large capacity, recourse must be made to the addition of small fixed capacities until calibration is correct. This adjustment was not actually found to be critical, the writer using a 0.5 mfd. and a 0.25 mfd. connected in parallel.

Extending the Range

Having done this, we next consider the means employed for adjusting the higher ranges, because, as stated before, it is necessary to pass more current through the meter when measuring AC values than is required for DC values, and as the same resistances are to be used as for DC voltages this is accomplished by means of by-pass condensers across these resistances.

The fact that another triangle is formed by this arrangement for each of the higher ranges causes us to consider why a parallel reactor is not used for the 25-volt range, but it is pointed out that, whereas the

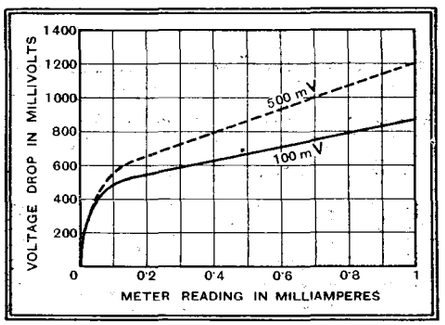

Fig. 2.—Typical curves of RMS voltage drop in rectifier and instrument with Westinghouse Rectifier Type MBS1. Full line, 100 mV. movement; dotted line, 500 mV. movement. (Reproduced by permission of Westinghouse Brake and Signal Company.)

reactance is the same, the resistance side of the triangle has been increased by 20,000 ohms. It is, therefore, found that the resulting impedance is sufficient for our purpose, but that in the case of ranges above 25 volts the addition of small capacities becomes necessary. Calculations and experiments showed that these approximate to 0.014 mfd. each for the 125-volt and 250-volt ranges, 0.006 mfd. for the 500-volt range, and 0.002 mfd. for the 1,250-volt range, and they may be variable or pre-set, to assist in the calibration of the various ranges. It must be

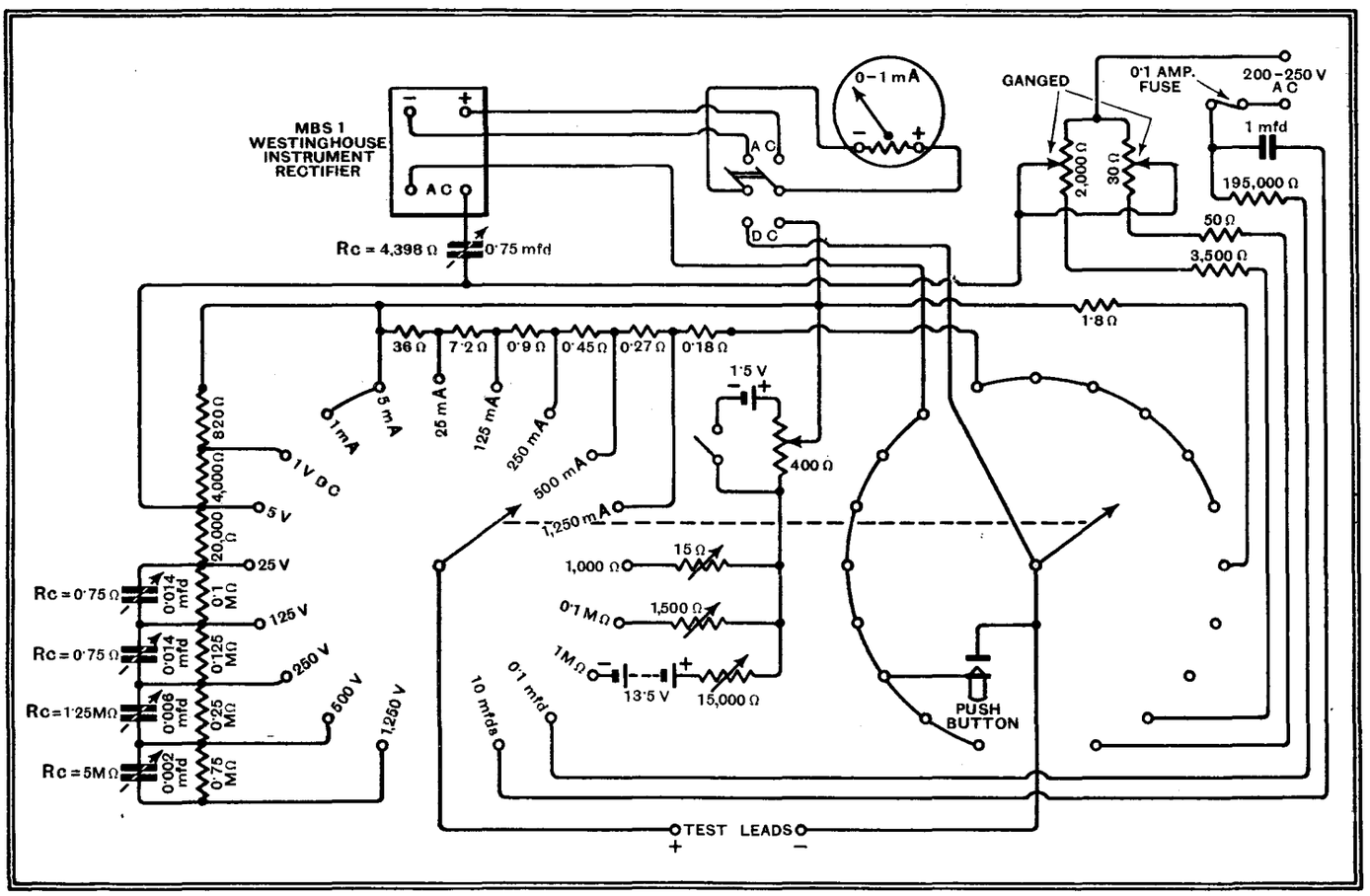

Fig. 1.—Schematic diagram of connections; the spindles of the two rotary switches are ganged.

Universal Test Meter—

remembered, of course, that the note above regarding the frequency at which the meter will be used also applies to these by-pass condensers.

It will thus be seen at once that the inclusion of the reactor condenser for the 5-volt range serves also effectively to block the passage of DC when the instrument is used for output measurements.

DC Current Measurements

Having completed the design of the DC and AC volts ranges of the universal multi-meter, the next stage is to consider the means of measuring DC current. There are two systems in general use, the first of which utilises separate shunt resistances, each in turn being switched in parallel across the meter to extend the range to the required value. The application of Ohm's law enables us to calculate these shunts, for we know that our meter movement resistance drops 180 millivolts at 1 milliamp; therefore, to extend the range to, say, 10 mA., a shunt resistance is required to drop the remaining 9 mA. at 180 mV., and this is indicated by the formula $R=E/C$ as being 20 ohms. Similarly, a separate shunt for the 100 mA. range would be indicated as approximately 1.8 ohms and so on. This method, while being satisfactory from a technical point of view, is inclined to be expensive, and also increases the bulk of the instrument.

The method used by the writer is known as the divided shunt, and, as the name implies, consists of one shunt only calculated for the next range, which in this case is 5 mA., and tapped off at various points for the other ranges. Ohm's law, as detailed above, gives the required resistance of this shunt as 45 ohms.

Now to find the various tappings along this resistance the formula used is $X=R\frac{I_1}{I_2}$, where X equals the shunt tapping required, R equals the resistance of the shunt, I_2 equals current range required. Thus, for example, we find that for the next range of 25 mA., $X=45\frac{5}{25}=9$ ohms, which is the amount of shunt resistance required for this next range. The remaining 36 ohms will, of course, be in series with the meter. Similarly, the next range being 125 mA., the formula shows us that $45\frac{5}{125}=1.8$ ohms, which now becomes the shunt resistance for this range, and the series resistance is increased by 7.2 ohms to 43.2 ohms. The other tappings are calculated in the same way, and reference to Fig. 1 shows these as 0.9 ohm for the 250-mA. range, 0.45 ohm for the 500-mA. range, and 0.18 ohm for the last range of 1,250 mA. This completes the theoretical design of the DC mA. ranges.

Winding the Shunt Resistance

For practical purposes the total shunt may be wound with a large gauge of wire if desired, although the writer has used separate filament resistors (with turns taken off to bring the resistance to the correct value) joined in series, it being only necessary to have a large gauge of wire for the lower values of resistance which are used for carrying the heavier currents. It will be noticed that no provision has been made for the measurement of AC current. This is because it would mean complication of the switching by the inclusion of a current transformer, as it is not possible to employ shunts across the instrument rectifier owing to the possibility of temperature errors and inaccurate readings due to the current density characteristic as already explained.

The ohmmeter or resistance measuring portion of the universal multi-meter next comes under discussion. The circuit used by the writer comprises a potentiometer across a battery, with on/off switch incorporated for breaking the circuit when not in use. This control is for the purpose of adjusting the voltage of the 1.5-volt battery and acts as the zero ohms adjuster, and its value for practical purposes may be 400 ohms or thereabouts. A series resistance of 15 ohms, in conjunction with a 100-mA. shunt of approximately 1.8 ohms, completes the circuit for measuring resistances from 0 to 1,000 ohms.

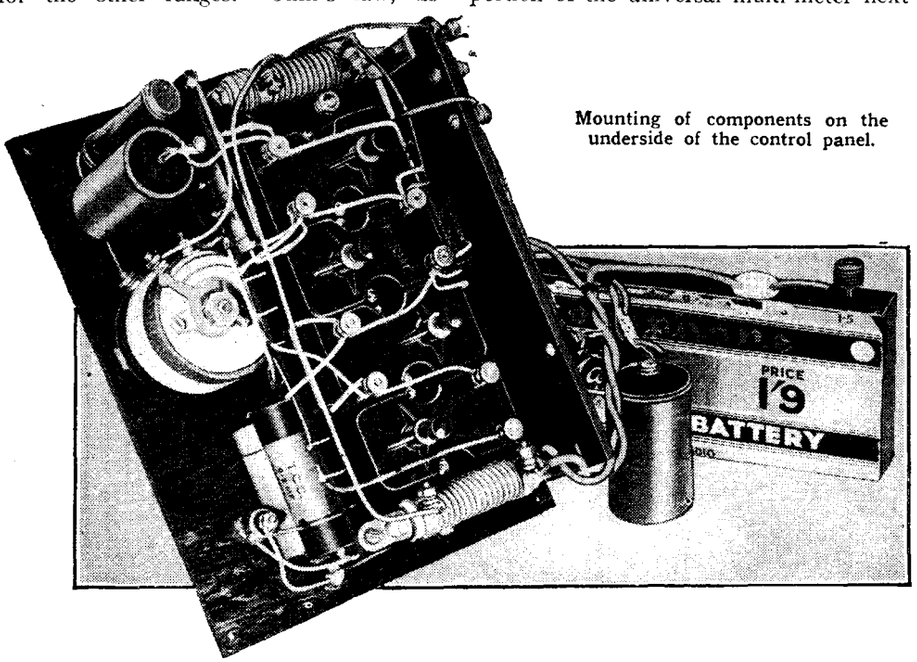

Mounting of components on the underside of the control panel.

The explanation of this is, that to pass 100 mA. at 1.5 volts the 15-ohm resistance is required to give a full-scale deflection on the meter. It does not follow, however, that the series resistance itself must have a value of 15 ohms, because there are other factors which have to be taken into account, such as the resistance of the associated wiring and joints and the zero adjustment potentiometer. In practice, therefore, it is advisable to make the series resistance variable, the method of calibration being to connect a standard ohmmeter of known accuracy across the test leads, the battery connections of the meter under test being shorted together to complete the circuit, and the series resistance then adjusted to indicate on the standard meter a total circuit resistance of 15 ohms, 1,500 ohms, and 15,000 ohms in each case; the zero adjustment potentiometer should, of course, be rotated to its middle point. Now, on the 1,000-ohm range, if another 15 ohms is included in the circuit the reading drops to half-scale; thus we find that the centre point for calibration purposes is determined by the series resistance. The scale can now be calibrated by plotting the current values indicated by dividing the amount of series resistance plus resistance required into 1,500 (which is the voltage drop multiplied by 1,000). For example, to obtain the point of calibration for 5 ohms, we add this figure to the series resistance of 15 ohms, and find that $\frac{1500}{20}=75$, which is the mA. reading which will be indicated if a resistance of 5 ohms was being measured.

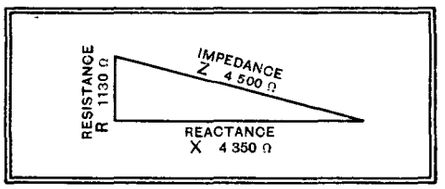

Fig. 3.—A condenser is used as a series reactance, 90 deg. out of phase with the meter and rectifier resistance.

Measuring High Resistances

Having plotted these readings on our scale for the 0 to 1,000 range, the calibration will hold for the further ranges, it being necessary only to multiply by 100 or 1,000, according to the range in use. If it is desired to read 0 to 10,000 ohms, the shunt resistance would need to be 20 ohms, the mA. range being now 10 mA., and the series resistance increased to 150 ohms, so that the centre reading on the scale now becomes 150 ohms, the indicated figure being multiplied by ten. The writer has for preference and convenience omitted this range from the model, and made the next range 0 to 100,000 ohms by cutting out the shunt and inserting in series an increased resistance of 1,500 ohms, adjusted, as explained, to obtain a full-scale

Universal Test Meter—

deflection of 1 mA. at 1.5 volts. The readings on our scale must now be multiplied by 100 and the centre point becomes 1,500.

A further battery of about 13.5 volts is switched in on the 1-megohm range to bring the total voltage to 15 volts, and the 15,000 ohms series resistance completes the circuit, and also indicates that the centre point now being 15,000 the indicated readings must be multiplied by 1,000.

Capacity Measurements

The writer, in common with others, has often experienced the need for checking the value of a condenser, and with this demand in view it was decided to incorporate in the meter under discussion some means of accomplishing this.

The most simple method of utilising a source of AC supply in series with a shunt circuit and the condenser under test appears to solve the difficulty and has been incorporated. Unfortunately, it is not possible to test electrolytic condensers by this means owing to the possibility of damaging them by the applied AC. However, for all other types the tester has been found to be very satisfactory, and so a brief description will be given. Dealing with the first range of 0.001 mfd. to 0.1 mfd., reference to Fig. 1 shows that this portion of the circuit comprises two resistances of 3,500 and 195,000 ohms in series, with a

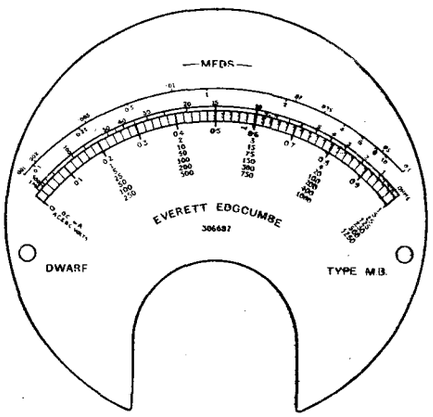

Actual-size scale as used on the author's instrument.

potentiometer of 2,000 ohms and the AC mains supply of 200-250 volts. The circuit is broken at the test terminals for the inclusion of the condenser to be tested. Assuming the test points to be short-circuited, a current will flow through the circuit, which varies from 1 mA. to 1.25 mA., depending on the voltage applied. The meter and instrument rectifier, together with the series reactor for the 5 volts AC range, is connected across a portion of this circuit which develops 5 volts, viz., the 3,500 ohms resistance, and the arm of the potentiometer. The potentiometer is for the purpose of compensating for the above current variations, and thus serves as the zero adjuster for capacity.

Now if the condenser to be tested is inserted in the circuit, a voltage drop dependent on the reactance of the condenser will take place, resulting in a reduction of the reading on our scale, and by the use of various formulæ already mentioned the various points for calibration may be obtained for plotting on the scale. A much simpler method of calibration, however, is to measure several condensers of known capacity and plot the readings obtained.

For testing condensers of a value higher than 0.1 mfd., the reactances of which are lower, it becomes necessary to reduce the amount of resistance for the shunt circuit and to pass a correspondingly higher current; the circuit is accordingly made up of the 50-ohm resistance in series with a potentiometer of 30 ohms and a 1-mfd. condenser. The current variation for different AC supply voltages is now between 65 and 85 mA., and is taken up in this case by the lower value of potentiometer, the two, of course, being ganged for convenience.

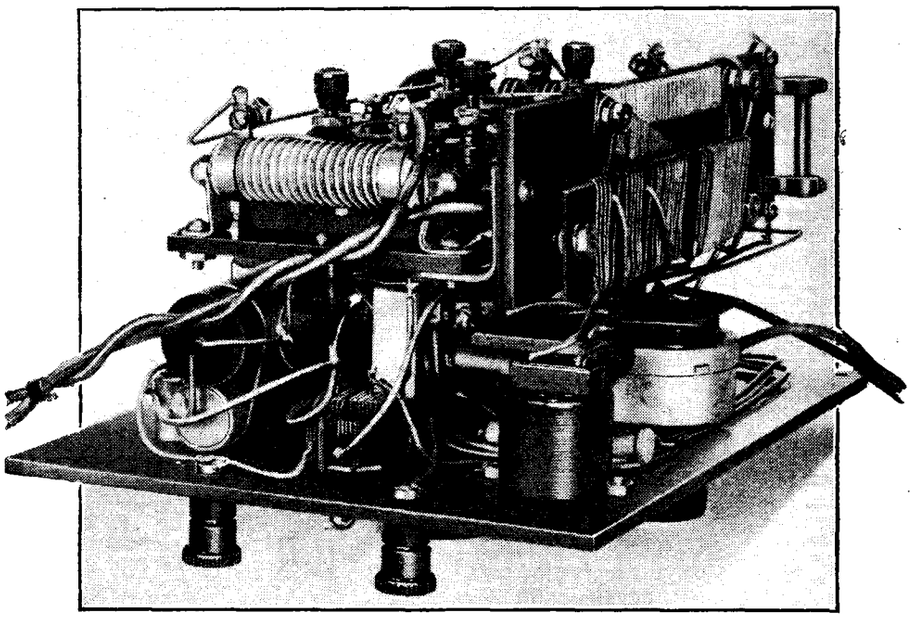

Another view of the interior of the meter.

It is now necessary to plot another scale for this range in the same way as already described, and our model is now complete.

Such an instrument as has been here described, while possibly not attaining to the B.S.I. standard, is, however, a really satisfactory job, capable of giving good service, and it is hoped that readers will find no difficulty in making it up from the particulars and diagrams supplied.

New Lampex Receivers

A Comprehensive Range at Moderate Prices

THE leading receiver in the programme of the Lampex Radio and Electric Co., Phantom House, Brewery Road, London, N.7, is the "Superhet Six," which is designed for AC mains only. At 12½ guineas this receiver incorporates an HF pentode signal-frequency amplifier, heptode frequency-changer, pentode IF amplifier, double-diode-pentode second detector and separate pentode output valve. The basic chassis will also be available in a radio-gramophone at 22 guineas, or with automatic record changer, 29 guineas.

The Lampex "Band Pass 4" is a "straight" receiver which will be obtainable in AC or universal form at 8½ guineas. A band-pass tuner precedes the HF amplifier stage, which incorporates an HF pentode valve. This is followed by an HF pentode in the detector stage and a pentode output valve. As a radio-gramophone the price of this model will be 15 guineas, or 22 guineas with automatic record changer.

The "Triple Pen" receiver is a "straight" set designed for AC mains, and, as the name implies, pentode valves

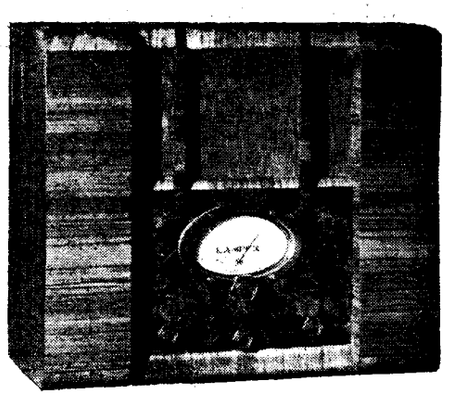

The Lampex "Superhet Six."

are used in the HF, detector and output stages. The loud speaker is, of course, of the moving coil type, and the price of the set is 7 guineas.

Two battery sets complete the range, the "Phantom S.G.3" at 7 guineas and the "Phantom Minx" at 4 guineas. The former is an HF-detector-LF set incorporating a permanent magnet moving coil loud speaker and the latter a det-2.LF receiver. The prices of both sets include HT and LT batteries.

Listeners' Guide

Outstanding Broadcasts at Home and Abroad

ON THE SCREEN. Henry Hall and the B.B.C. Dance Band as they appear in the new B.I.P. film, "Music Hath Charms," now in preparation at Elstree. The film is based on an original story by L. du Garde Peach.

BISLEY

THE greatest event in the marksman's year—the King's Prize at Bisley—is the subject of a running commentary tomorrow afternoon (National) by Captain E. H. Robinson, himself a King's Prize winner.

Competitors come to Bisley from all over the British Empire. The King's Prize of £250, a gold medal and gold badge is the riflemen's championship. It is shot for in three stages. The first consists of seven shots at 200, seven shots at 500, and seven shots at 600 yards, and in this there are between a thousand and twelve hundred competitors. The leading three hundred pass on to the second stage, which is at 300, 500 and 600 yards, ten shots being fired at each distance. It is the leading 100 who shoot the final stage tomorrow afternoon at 900 and 1,000 yards. Fifteen shots are fired at each range.

MUSICAL EVENTS

ONE of the most important musical events in the B.B.C. programmes this week is the broadcast by the London Symphony Orchestra on Sunday evening (Regional). Sir Hamilton Harty conducts the No. 7 Symphony in C by Sibelius.

On Monday Antoni Sala ('cello) and Katherine Goodson (piano) are to give a Beethoven and Brahms recital (National).

A pianoforte recital of Russian works by Glazounov, Scriabin and Prokofief will be given on Wednesday (National) by Lilias Mackinnon.

On the same evening in the Regional programme Leslie Heward will continue his "Why I like . . ." series with a talk on Moussorgsky with illustrations by the B.B.C. Midland Orchestra and Roy Henderson (baritone).

IMPERSONATION

"NAVARRE" is so good that we may soon have Maurice Chevalier impersonating "Navarre" impersonating Maurice Chevalier. "Navarre" comes to the microphone on Monday evening (National) to give life-like imitations of such famous artists at Richard Crookes, Chaliapin, Tauber, Chevalier, Gigli, and Harry Lauder.

The B.B.C. should find "Navarre" quite a useful person to have about the place when funds run low.

Another excellent impersonator, Beryl Orde, will be heard the following evening in a sketch with Eddie Pola with the title, "Hollywood Headlights." This time it is film stars who will be re-created, and those who have heard Beryl Orde's previous broadcasts know what uncanny replicas may be expected.

30-LINE TELEVISION

Baird Process Transmissions.
Vision, 261.1 m.; Sound, 296.6 m.

MONDAY, JULY 22nd.
11.15 a.m.—12 p.m.
Leslie Goossens (modern creative dances); Deborah Britonoff (modern character dances); Rose Quong (the Chinese actress); Vivien Lambelet (soprano).

WEDNESDAY, JULY 24th.
11.0 a.m.—11.45 a.m.
Hungarian Goulasch: John Hendrik and Harriett Bennett (songs); Derra de Noroda, assisted by Richard Ellis (authentic national dances); Ray and Geoffrey Espinosa (dances); Georgie Harris (comedian); Sydney Jerome's Orchestra.

CROONING AT FIFTEEN

THERE will be palpitation in the National studio at 8.30 on Monday when a number of new artists provide a variety programme, "Our First Broadcast," under the direction of Lawrence Baskcombe. They will include Tom Drew, Bobbie Farnell, Stanley Kirkby, George Lane, and a fifteen-year-old crooner, Joan Rawlings.

ALL THE WINNERS

ANONA WINN, the Australian star, will be heard again on Monday (National) with her "Winners." This act has become so popular that the "Four Winners" are now Six. Perhaps we shall eventually hear Anona Winn with a complete band.

ALICE AGAIN

VICTOR HELY-HUTCHINSON'S charming incidental music will be one of the features of Cecil Lewis's production, "Through the Looking Glass," to be broadcast on Monday next (Regional, 8) and Tuesday (National, 8.15). This adaptation of Lewis Carroll's world-famous fantasy was last broadcast in 1930. The cast for next week's performance is a large one and includes Ralph Richards, Diana Beaumont, Clare Harris, Athene Seyler, Walter Hudd, Philip Wade and Russell Thorndike. The singers will be John Armstrong and Alice Moxon. The B.B.C. Theatre Orchestra will be conducted by Hely-Hutchinson.

"CITY OF SONG"

BACK again to Vienna we shall fly on Wednesday (National, 8.30) and Thursday (Regional, 8) for Julius Buerger's *potpourri*, "City of Music." We shall be taken back 150 years to hear the famous Strauss waltzes, and excerpts from Mozart's "Magic Flute" and the works of Beethoven and Schubert.

SERGE KRISH, whose Septet is one of the most popular light orchestral combinations in the B.B.C. programmes. They will be heard on Tuesday (National).

According to the compiler the music will strive to depict Vienna's lovely laughing girls, the festival of the new wine which is drunk in the little houses at Grinzing, and the carnival side of this city of song.

It is hoped that listeners will catch the infectious spirit of the music and join in the songs.

The music will be provided by the B.B.C. Theatre Orchestra, conducted by Stanford Robinson, and the soloists will be Joan Coxon (soprano), Jan van der Gucht (tenor) and Thorpe Bates (baritone).

for the Week

HIGHLIGHTS OF THE WEEK

FRIDAY, JULY 19th.

Nat., 7.45, International Folk Song and Dance: Norway. 8.30, More Pages from Sandy Powell's Album. 10, Beethoven Concert by B.B.C. Orchestra (C).

Reg., 8, Concert by Band of the Garde Republicaine (relayed from Paris). 8.45, "The Mulberry Bush" (E. M. Delafield).

Abroad.

Stockholm, 7.30, Symphony Concert in the Town Hall Gardens.

SATURDAY, JULY 20th.

Nat., The King's Prize, Bisley. ¶Davis Cup Inter-Zone final, Wimbledon. ¶Geraldo and his Orchestra in "Dancing Through."

Reg., Fred Hartley and his Novelty Quintet. ¶B.B.C. Theatre Orchestra. ¶Time for Dancing (Henry Hall and B.B.C. Dance Orchestra.)

Abroad.

Prague, 9.45, Paul Dukas Memorial Programme.

SUNDAY, JULY 21st.

Nat., Bernard Crook Quintet. ¶Medvedeff's Balalaika Orchestra. ¶B.B.C. Theatre Orchestra and Chorus in British concert.

Reg., B.B.C. Military Band. ¶Troise and his Mandoliers. 9.20, London Symphony Orchestra, conducted by Sir Hamilton Harty.

Abroad.

Toulouse, 9, Concert version of "Tosca" (Puccini).

MONDAY, JULY 22nd.

Nat., Celebrity Trio. 8.30, Variety: "Our First Broadcast." ¶Anona Winn and her Winners. ¶"Navarre": Impersonations.

Reg., 8, Lewis Carroll's "Through the Looking Glass." ¶B.B.C. Military Band with Frank Titterton (tenor).

Abroad.

Warsaw, 9, Polish Music by the Station Orchestra.

TUESDAY, JULY 23rd.

Nat., B.B.C. Midland Orchestra. ¶Ceremony of the Keys. ¶Serge Krish Septet.

Reg., Alfredo Campoli Trio. ¶Harold Ramsay's Rhythm Symphony.

Abroad.

Brussels, No. 1, 9, Symphony Concert from the International Exhibition.

WEDNESDAY, JULY 24th.

Nat., Variety from the Argyle Theatre, Birkenhead. ¶Russian pianoforte recital by Lilias Mackinnon. 8.30, "City of Music." ¶Leslie Bridgewater Quintet.

Reg., "Why I Like Moussorgsky," by Leslie Heward. ¶Albert Ketelby Concert from Buxton.

Abroad.

Brussels, No. 11, Recital of Schubert songs by Frédéric Anspach.

THURSDAY, JULY 25th.

Nat., Fred Hartley and his Novelty Quintet. ¶Greta Keller with a Quintet accompaniment. ¶B.B.C. Orchestra, conducted by John Barbirolli.

Reg., 8, "City of Music." ¶"Ribbon Roads from the Air."

LOCKING UP AT THE TOWER

APPARENTLY time does not stale the Ceremony of the Keys as a broadcast item, and on Tuesday evening National listeners will hear it again. The ancient ceremony will be carried out by the Chief Warder of the Tower in conjunction with the 3rd Battalion Coldstream Guards.

Apart from its historic appeal the broadcast offers a fine study in acoustics. With a little imagination the listener can almost see the guardsmen as they approach the Bloody Tower and finally proceed to the Main Guard.

HISTORIC THEATRE

THE Argyle Theatre, Birkenhead, from which there will be a variety relay on Wednesday (National), was first opened in 1868, when it was primarily an hotel.

There is in existence an old, yellow-leaved ledger listing the names and salaries of thousands of variety artists, some of them now world-famous, such as Harry Lauder, George Robey, Wilkie Bard, and Charles Chaplin, who made his first appearance there. It is known that George Formby, senior, received thirty shillings a week when he first appeared at the Argyle.

OUT-OF-DOORS

Two interesting open-air broadcasts are offered by Scandinavian stations. To-night at 7.30 Motala will be relaying a concert by a large symphony orchestra in the Town Hall Gardens, Stockholm. To-morrow (Saturday) at 8 p.m. the Norwegian stations will relay a Summer Revue from a seaside resort, Bygdö Sjöbad, which is probably known to many British tourists.

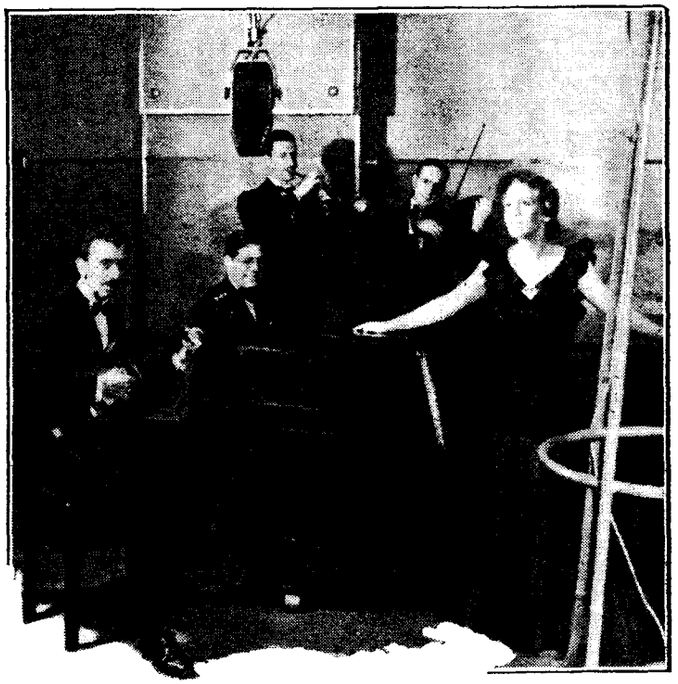

ANONA WINN and some of her "Winners." Since this picture was taken the party has increased to seven, and may one day become a band.

BATHING.

"BATH at Home," Hamburg's programme at 8.10 on Monday next, is not concerned with soap and water but with sun-bathing facilities in the big city.

DOWN A SALT MINE

THE Germans excel at outside broadcasting. What promises to be a good programme will be a broadcast from Leipzig at 9.10 on Monday celebrating the 1,000th anniversary of the Kali Salt Works at Stassfurt. Listeners will be given sound impressions of work going on several hundred feet below the earth. There will be humorous relief and musical accompaniment.

RADIO FAULT FINDING

IN Berlin's second great puzzle programme at 8.10 on Tuesday listeners will be invited to spot mistakes in orchestral selections, vocal items and dramatic sketches. The programme will be staged on a railway journey from Berlin to Leipzig.

BAVARIAN EVENING

A PROGRAMME full of melody and rhythm is promised by Munich and Stuttgart at 10.30 on Tuesday when an hour-and-a-half will be devoted to typical Bavarian folk music. There will be yodelling, and a "Schrammel" orchestra, a favourite musical combination of Southern Germany and Austria, which consists of a violin, viola, double bass and zither.

WHERE ENGLISH SCORES

A VERSATILE syncopated song trio will broadcast from Copenhagen on Wednesday, July 24th, at 10.25 p.m., viz., the Degen - Körner-Behrens Trio. Selections will be given in Danish, Swedish, Spanish, German and English, and, as a Danish correspondent remarks, will probably corroborate the view that the English language, with its large number of monosyllabic words, is still the best for syncopation.

THE AUDITOR.

"CITY OF MUSIC." A vivid glimpse of Vienna by night. The picture shows a group of Tyrolean musicians at the Burgtor.

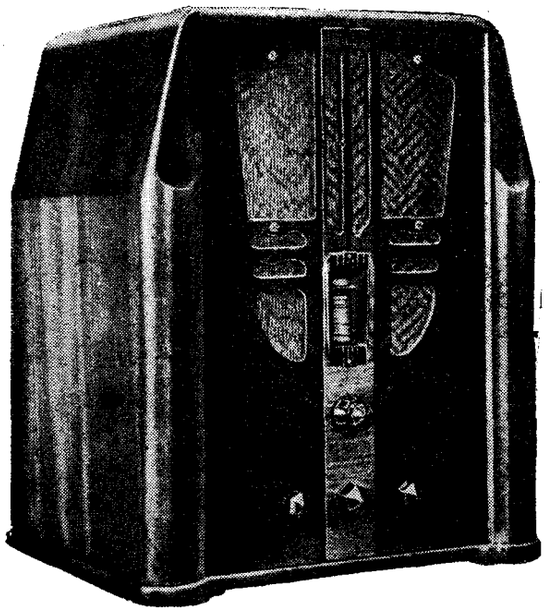

Philco MODEL 98

An All-wave Superheterodyne for AC Mains

FEATURES.—***Type.***—*Table-model AC superheterodyne for short, medium and long waves.* ***Circuit.***—*HF pentode signal-frequency amplifier—heptode frequency-changer—HF pentode IF amplifier—double-diode-triode second detector—push-pull pentode output valves. Full-wave valve rectifier.* ***Controls.***—*(1) Tuning. (2) Volume and on-off switch. (3) Tone. (4) Waverange.* ***Price.***—*21 guineas.* ***Makers.***—*Philco Radio and Television Corporation of Great Britain, Ltd., Aintree Road, Perivale, Greenford, Middlesex.*

IN the literature describing this receiver the makers lay special emphasis on the advantages and attraction of short - wave reception, and in these circumstances it is only natural to look for something out of the ordinary in the performance on the short waveband. It is safe to say that expectations in this direction will be fulfilled, for the superheterodyne circuit includes a signal-frequency HF amplifier which has a special type of intervalve coupling to ensure efficient amplification on the short wavelengths.

The set will work well on any good outdoor aerial, but special provision has been made for the use of a screened aerial of the transmission line type in localities where external interference is excessive. The aerial tuner consists of a single tuned circuit with inductive coupling to the aerial, and a wave trap, tuned to the frequency of the IF amplifier, is also included.

The coupling between the HF amplifier and the frequency-changer is of the tuned grid type. The HF amplifier is a variable-mu pentode, and the anode current to this valve is used to operate the shadow tuning indicator. The frequency-changer is a heptode and the IF amplifier, which functions at 460 kc/s, is an HF pentode of the same type as that used in the first stage. The second detector is a double-diode-triode in which the diodes are connected in parallel and fed from the secondary of the output IF transformer.

Suitable filtering isolates the DC component of the rectified current which supplies the AVC bias to the preceding three stages. The volume control in the coupling to the triode amplifiying portion of this valve is tone compensated. An unusual feature is the provision of a jack for the pick-up connections, which results in considerable simplification of the waverange switching.

The output stage comprises two pentodes in push-pull fed through a transformer from the LF portion of the second detector. The three-step tone control consists of an arrangement of by-pass condensers between the grids of the push-pull valves. The moving-coil loud speaker incorporates a hum-bucking coil and its field is used for smoothing the output from the full-wave valve rectifier.

The chassis, which is mounted on rubber, is notable for its clean finish and neat wiring, while the mains transformer is of unusually generous proportions. The waverange switches are of the rotary type with double contacts, and it is obvious from their construction that unlimited service may be anticipated without trouble from contact noises. The tuning dial is

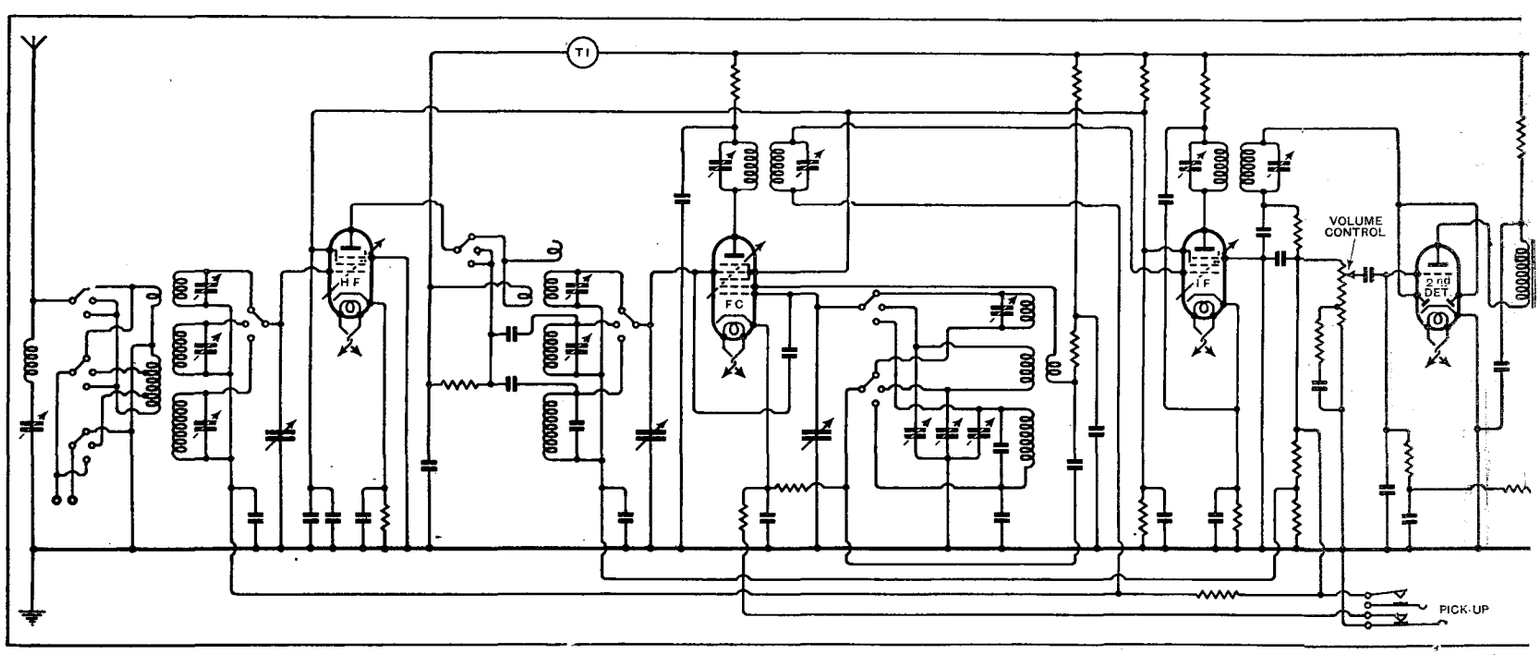

Notable features of the circuit are the use of push-pull pentodes in the output stage and a special jack for connecting a gra

calibrated in kilocycles, and while actual stations are not marked the allocation of frequency bands to transmitters of various types is indicated, and will be found specially useful on the short waveband. The waverange switch automatically illuminates the appropriate dial and throws a sharply defined pointer on to the scale. Immediately above the tuning scale is the shadow tuning indicator in which the minimum width of the shadow indicates the point of maximum signal strength.

Throughout the period of the tests the general liveliness on the short waveband and the exceptional strength of many of the Continental short-wave services leave no doubt whatever of the ability of this set to pick up really long-distance transmissions, and now that the reception of American short-wave programmes is gaining in regularity and reliability the prospective purchaser can be assured of a wide scope in his choice of inter-Continental programmes. The range covered by the short waveband is from 18 to 5.7 megacycles (16.7 to 52.6 metres) and the adoption of a signal-frequency amplifier removes the double tuning point which is so often a source of confusion in sets employing a simple autodyne arrangement.

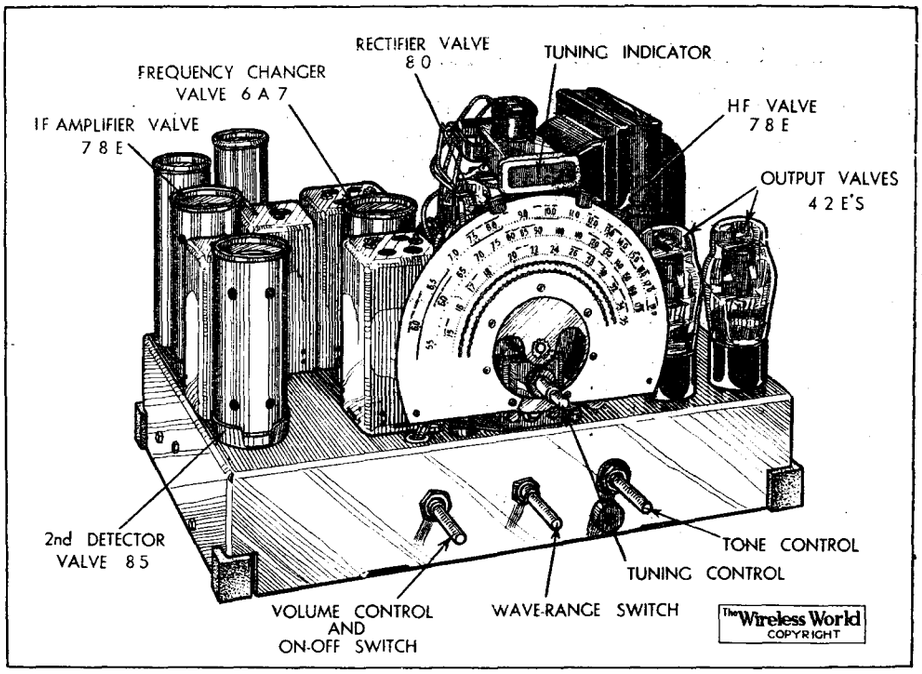

The chassis is mounted on rubber corner blocks and all valves carrying HF currents are screened.

Long-Wave Selectivity.

As a normal broadcast receiver the Model 98 can more than hold its own with receivers of similar specification designed for the medium and long waves only, and the selectivity, particularly on long waves, is of a high order. It is seldom possible to receive the Deutschlandsender in Central London without some sideband interference from Droitwich and Radio-Paris, but in this case no trouble from this cause was experienced and with the tone control in the brilliant position the high selectivity did not result in woolliness of tone.

On the medium waveband less than two channels were lost on either side of the local London stations and, although there was some tendency to sideband shriek unless the set was accurately tuned by means of the shadow tuning indicator, there was complete freedom from any objectionable second-channel whistles. In our judgment the best quality of reproduction is obtained with the tone control in position two on the medium waveband and in position one on the long waves. Position three should only be necessary when severe local interference is experienced on the short waveband, and some sacrifice of quality is only to be expected in these circstances. Normally, the reproduction is notable for its brightness and clarity, and the quality of speech and the singing voice is very realistic. The bass is there without being obtrusive, but it is in the low frequencies that overloading is first noticeable when the output limit is exceeded.

On the medium waveband the first position of the tone control is too brilliant for all but low volume levels, but it is just right on the long waveband, where it adequately replaces sideband frequencies which are cut by the higher selectivity.

The Philco Model 98 may be said to represent the best modern practice in all-wave receiver design, and the short waveband will contribute as much in the way of additional stations of good programme value as it does in the added interest of really long-distance reception.

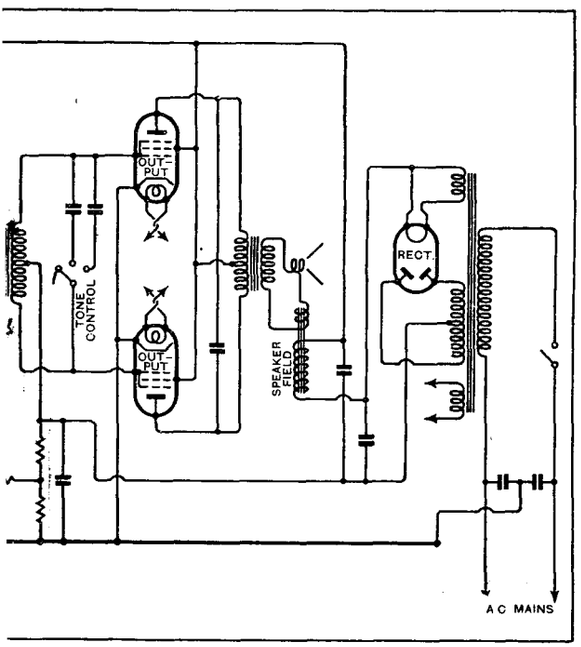

nophone pick-up.

Next Set Review—

McMICHAEL MODEL 235

THE RADIO INDUSTRY

CONVENIENTLY situated showrooms, readily accessible from all parts of London, have now been opened by A. F. Bulgin & Co., Ltd., at 64, Holborn Viaduct, London, E.C.1; a complete range of Bulgin products is available there for inspection. Telephone, Central 2751.

Incidentally, this item of news is taken from the current issue of the *Bulgin Monthly Bulletin*, a useful little publication of which copies are available to readers who care to apply to the firm's headquarters at Abbey Road, Barking, Essex. The current issue deals, among other topics, with Television Prospects, a Short-wave Superheterodyne, and Tuning Indicators. The proposed issue of a book of circuit diagrams is announced.

Marconi's Wireless Telegraph Company has concluded an arrangement with the British Radiostat Corporation, whereby it acquires rights under present and future "Stenode" patents, including licensing rights for Stenode broadcast receivers. This implies definite recognition of the commercial possibilities of Dr. Robinson's invention, which, technically speaking, undoubtedly makes an important contribution to the science of receiver design.

Two new Atlas mains units are announced by H. Clarke & Co., Ltd., George Street, Patricroft, Manchester. Model AC2 is a compact eliminator for AC mains, providing an output of 12 milliamps at 120 volts, with intermediate tappings at 60 and 90 volts. A Westinghouse rectifier is included. Model DC20 is a companion instrument for DC supplies, but gives a little higher current output.

The prices of Drydex batteries in the Blue, Yellow, Orange and Brown Triangle series have been substantially reduced.

Although the firm of F. E. Godfrey (Radio), Ltd., of 63-67, Chenies Mews, Tottenham Court Road, London, W.C.1, is best known as constructors of special apparatus to customers' specifications, it is also able and willing to prepare original designs. The services of the firm should therefore be valuable to inventors and others having ideas which require to be worked into practical form.

BROADCAST BREVITIES

By Our Special Correspondent

In the Corridors

NEVER since the primeval age of British broadcasting has the B.B.C. announced so many new appointments as last week. Such a general post will take place on October 1st that the corridors of Broadcasting House will be thronged with bustling officials looking for their new offices.

This will be a grand opportunity for the Pressmen to catch a few victims off their guard.

Sir Stephen Tallents' Special Mission

The most spectacular move is the importation of Sir Stephen Tallents from the Post Office, where he has done notable work as Public Relations Officer. Many people thought he would follow Sir Kingsley Wood to the Ministry of Health, but it has been decreed that Sir Stephen should turn his steps to Portland Place.

Actually it is considered unlikely that Sir Stephen will spend very much time at Broadcasting House; more probably he will tour the country on a new mission, viz., building up goodwill and, incidentally, assessing listening reaction to the programmes of the B.B.C.

All That Matters

I much doubt whether listeners really care whether Mr. R. H. Eckersley and Mr. Gladstone Murray become Assistant Controllers or Controlling Assistants; what they want to know is whether these impressive changes will bring about an improvement in the programmes.

As watcher over the spoken word Mr. Gladstone Murray will superintend talks, school broadcasting, religion, and the news bulletins, while Mr. Roger Eckersley will have the last word in music, drama and variety.

Foreign Relations

Beside being the Director of Programme Planning, Mr. R. E. L. Wellington will, I understand, take charge of the Foreign Department, which maintains liaison between the B.B.C. and its colleagues abroad.

Pacifying the Provinces

For some time there has been considerable feeling in the provincial centres over the alleged grandmotherly attitude of the London Headquarters. The appointment of Mr. C. A. Siepmann to Director of Regional Relations may help to mend matters, especially as Mr. Siepmann has had a long and varied experience in the service of the Corporation.

That Black List

A LOVELY tale went the rounds last week to the effect that the B.B.C., in its efforts to make the programmes suitable for children of all ages, was exhibiting lists of "forbidden words" in its studios. I can imagine nothing more calculated to encourage a *lapsus linguæ* than the sight of a string of naughty epithets dangling before one while speaking into the microphone.

Red Ink Regulation

Actually, a list of instructions has been prepared which deals in general terms with the topics which it is desirable that artists should omit from their material.

The most important point, and it is emphasised in red ink, is that "no change must be made in a programme after it has been passed at the final rehearsal."

BROADCAST EDUCATION.—Miss Mary Somerville, who received the O.B.E. for her work in connection with school broadcasts, photographed last week outside Buckingham Palace after the Investiture.

His Reason

Another important clause is that personal messages must not be transmitted through the microphone. Many artists still cherish the illusion that they will be permitted to say a kind word to Auntie Aggie in Middlesbrough or Uncle Bert in Bolton.

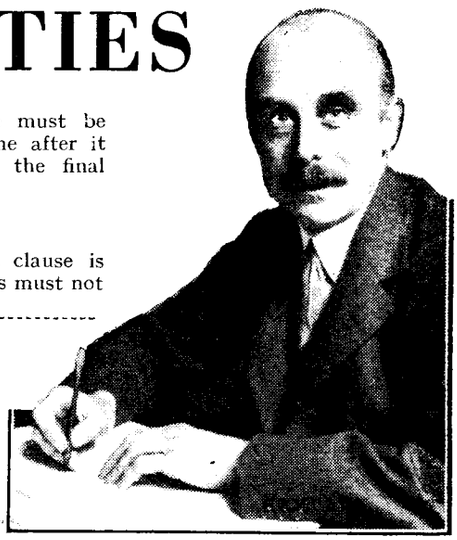

SIR STEPHEN TALLENTS photographed at his desk at the Post Office. On October 1st he transfers to Broadcasting House as Public Relations Officer of the B.B.C.

Captain Eckersley used to tell in the old days of a Danish singer at Savoy Hill who could not be persuaded to lower his voice and thus avoid blasting the microphone. The singer's reason for bawling at the top of his voice was the hope that his love song would be heard by his wife in Denmark.

Tauber's Message

The last personal message through a B.B.C. microphone was given by Richard Tauber three weeks ago to the composer, Franz Lehár, who, by arrangement, was listening in Vienna.

Radiolympia Plans

WILL television be necessary at Radiolympia? The exhibition authorities are erecting a theatre there which will have the largest proscenium arch in London and the stage will be correspondingly big.

This is much better than television, which gives an image only three or four inches wide.

John Sharman will again be in charge of the arrangements. Performances, each lasting two hours, will take place daily during the run of the exhibition, from August 14th to 24th.

A Good "Bill"

Year by year it is emphasised that August is a bad month for recruiting artists—as though the variety profession has no unemployment problem in the dog days—but, nevertheless, there is always a good "bill." For this year's Radiolympia John Sharman has definitely secured Elsie and Doris Walters, the Two Leslies, Norman Long, Tommy Handley, Lily Morris, Elsie Carlisle, Sam Browne and Sydney Baynes' Band.

Girl Dancers

A famous London troupe of sixteen girl dancers will also appear. Henry Hall and the B.B.C. Dance Orchestra will appear in person during the week of August 19th to the 24th.

We are promised that 1935 Radiolympia, compared with last year's, will be a little more colourful, a little faster, and still more entertaining.

The "Proms"

NEVER do I remember so imposing a list of soloists as that for the 1935 Promenade Concert Season. All the stars of the musical world will be heard—Elisabeth Schumann, Conchita Supervia, Stiles Allen, Oda Slobodskaya, to name only a few. The pianists include Moiseiwitsch, Harriet Cohen, Harold Samuel and John Ireland.

Among the violinists will be heard Szigeti, Sammons, and Isolde Menges. Lionel Tertis will bring his viola and Piatigorsky is one of the 'cellists.

One-man Concerts

All the concerts in the eight weeks' season (August 10th to October 5th) will be broadcast on National or Regional wavelengths. Sir Henry Wood will be conducting for the forty-first year in succession. Charles Woodhouse will be principal violinist and Berkeley Mason organist and accompanist.

The programmes follow the traditional lines. Monday night is Wagner night, and Fridays are dedicated to Beethoven. Bach and Brahms alternate on Wednesdays.

I notice an increasing number of one-composer concerts. There will be a Schubert concert on August 29th and Saint-Saëns Centenary concert on September 3rd, and a Liszt concert on September 10th. Several nights will be devoted exclusively to Russian music.

Letters to the Editor

The Editor does not hold himself responsible for the opinions of his correspondents

Morse Code Records

I WOULD like to bring to the notice of all who are struggling with the Morse Code (*W.W.*, June 14th, 1935) three Columbia records, Nos. 3262-3-4. These are a complete course of instruction in the Morse Code, and, together with the booklet, are an indispensable aid to the learner.

DONALD W. ALDOUS.

Ilford, Essex.

A Radio Hour Meter

I HAVE read with interest "Diallist's" remarks on the subject of "How Many Hours," and I think it is time a more definite means was designed to indicate the number of hours a wireless receiver is used by its owner. I am not in the habit of writing to the Press, this being the first time I have done so, but my calling as a service engineer brings me into touch with the people I am sure you must have been thinking about when you wrote that article in *The Wireless World*.

The question of how many hours a set has been in use always arises when one is called in to service a receiver, and I feel sure most listeners greatly underestimate the time. Often when a customer has had a set in his or her possession for a month or six weeks, they often tell me that the set has only been used for about twelve hours in that time.

My own opinion in this matter is that most receivers are worked from eight to ten hours a day.

The solution to this problem can only be brought about by the fitting to all mains receivers of an instrument that will accurately record the number of hours a receiver is in use. This, I think, could be made on the principle of the electric clock, with the number of hours shown in the same way that miles are shown on the mileometer of a car. I feel sure that an instrument of this kind would be a blessing to both the set manufacturer and the listening public alike.

J. BARRELL.

London, N.11.

High-quality American Receivers

I AGREE with Mr. Mistovski that the best is not obtained from divided-channel amplification by the eventual commonisation of frequencies in a later audio stage. Nevertheless, I would refer Mr. Mistovski to the *Wireless Engineer* of February, 1935, wherein some information on this subject can be deduced from an article by Mr. A. C. Bartlett, M.A.

The 20-watts output from the Howard-Grand receiver is not obtained by Class B amplification, but by Class A prime amplification.

Mr. Mistovski seems under the impression that all Class B systems are definitely in a subordinate class. This need not be the case, and I would refer him to papers by H. L. Shortt in *Radio Engineering*, of April and May, 1935, and a further paper by Apstein in the same journal, April issue.

Mr. Mistovski states he fails to see how the Howard-Grand receiver is capable of the same quality of reproduction as *The Wireless World* Quality Amplifier. May I suggest he reads my letter again, and he will find I definitely stated I had great doubts as to the Howard-Grand reproducing with the same absolute fidelity as *The Wireless World* design.

Laboratory measurements recently conducted by the writer on both the Howard-Grand and *The Wireless World* design conclusively prove *The Wireless World* design to be superior in every respect.

Further tests have been made on *The Wireless World* design and the Howard-Grand receiver since my letter appeared in print, each receiver being checked without loud speaker and with loud speaker. Throughout these tests an RCA-type TMV 52E oscillator, which has a range of 20-17,000 cycles, was employed. When the speakers were in circuit the same audio-oscillator and Rayleigh disc method were employed.

The results prove without any doubt whatsoever the absolute superiority of *The Wireless World* design.

R. E. BLAKEY,
Everett, Edgecumbe and Co., Ltd.

London, N.W.9

IT was with much interest that I read the letter of your correspondent, Mr. Joughin, in last week's issue.

At the moment I am using a five-valve battery superhet with delayed AVC and diode detection with QP 240 output coupled to a good-sized moving coil speaker.

Regarding wet HT (hired), my experience has been a very unhappy one, and I am now using nickel-iron cells and charging them at home from car batteries.

So far it seems that my outfit represents about the best that can be done for the user of batteries, and quality is certainly very high. The HT is always 180 volts on starting, dropping to about 170 in about four hours. *The Wireless World* designs seem to me the ultimate that can be achieved *with existing apparatus*.

But here is the point.

I recently heard a *Wireless World* AC Monodial with five watts amplifier output, coupled to two hand-made energised speakers. And, believe me, the results were so vastly superior to *any* battery receiver (quite apart from volume) that I almost lost interest in battery receivers for good.

We *must* realise that *quality* and *output* are proportional to *power input* and the speaker response, which is also mainly dependent upon field watts.

I say frankly that you *cannot* get *first-class* quality with battery receivers except under excessive current consumption conditions with Class A amplification.

I have yet to hear a battery receiver as good as my own. But it is miles short of what a really critical ear would call high quality.

That it is bearable and a very pleasant noise even is true.

I know this is controversial, purposely so, however, as I should like to hear other opinions.

Even with my present current consumption my receiver chews up wet HT in two to three weeks.

Dry batteries are, of course, out of the question for the quality man, even for GB use.

Improvements and modifications can, of course, be introduced, and we can implicitly rely on *The Wireless World* to attend to this matter.

But we are stuck at the output stage, and here we seem to have reached a deadlock until the valve and speaker manufacturers really *do* something for battery users.

London. S.E.13. F. SMITH.

All-wave Receivers Overseas

CONGRATULATIONS on your Editorial regarding all-wave receivers, contained in the issue dated June 14th last.

Up to date the British manufacturer's conception of an all-wave set can only be classed as laughable when they are compared with an American-made machine. There have been exceptions, of course, but in the majority of cases these have been ruled out by price.

Comment on your remarks regarding service, spares, etc., would be superfluous. Dr. Afifi Pasha, when in the U.K. with the Egyptian Trade Mission, stressed the same point regarding British radio (and cars).

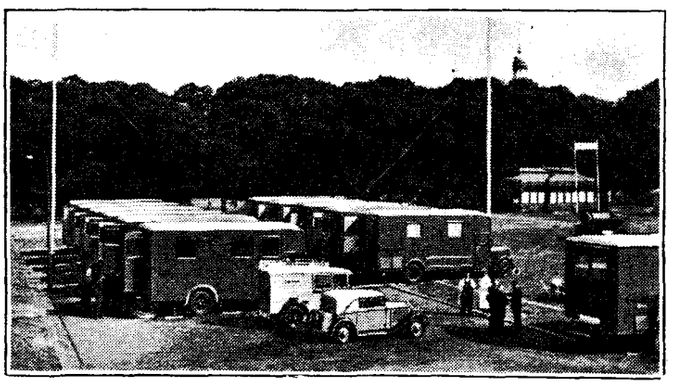

GERMAN POST OFFICE TELEVISION. The new mobile column, which comprises fourteen separate vans. There are two transmitters and the power supply is derived from two 135 h.p. Diesel engines. Tests with the equipment are to be carried out on the Brocken mountain.

Your reference to half-hearted exportation of apparatus which was non-competitive was very timely and to the point. The day when "British Made" stuck on any old thing was a sales aid is very much past. Customers, these days, look for something that will exactly fill their needs, and not something that "might."

My advice to any manufacturer who is contemplating a machine incorporating short-wave tuning would be to buy a medium-priced American-made machine and seriously study its performance, especially on the radio, as distinct from the A.F. side.

May I make a few suggestions as to the type of machine required, these suggestions being made after over eight years' listening experience on the short waves, and also

Letters to the Editor—

from trade experience with U.S.A. and other machines?

First, the bugbear of image reception, i.e., reception of any one transmission at two points on the dial, *must* be eliminated. This indicates at least one tuned signal-frequency stage and its associated valve prior to the frequency-changer. Utilising one of the multi-electrode frequency-changer valves as the first stage is useless.

A high-speed time constant AVC system should be aimed at. What is good on medium waves is not necessarily so at, say, 13 metres.

Selectivity, even on the short waves, is a necessity, and ease of tuning on the same wavelengths should be taken into consideration.

Dials should be of the "full vision" type and calibrated on all wavelengths.

For the majority of overseas countries long-wave tuning is not absolutely necessary, and only tends to added switch complications.

Servicing.—Easy access must be aimed at, and it can be mentioned here that a set full of multi-purpose valves does not make servicing any easier. For one thing, there are too many valve connections for the service engineer to memorise, and continual reference to service instructions consumes too much time.

Generally, all the U.S.A. machines are very extensively advertised, and manufacturers, to get a footing at this late date, must be prepared to give the overseas agents liberal support in this matter.

Fully detailed service instructions should be supplied with the first batch of machines shipped, as it is quite possible for apparatus to become deranged in transit.

Finally, it would perhaps be worth while mentioning that several of the Dominions are becoming interested in the export of this type of machine.

The only excuse that can be offered for a letter of this length is my interest in seeing British-made receivers more than holding their own with the products of rival countries. P. A. SHEPHERD.

Cairo, Egypt.

Radio Data Charts—VI.

Transmission of Sidebands by a Tuned Circuit

By R. T. BEATTY, M.A., B.E., D.Sc.

IN Fig. 1 a tuned circuit LC is driven by a weakly coupled untuned input circuit. Let the value of the input radio-frequency EMF be kept fixed while its frequency varies by a few kilocycles per second on either side of the tuning frequency. Then the output EMF is a maximum at the tuning or resonance frequency and falls off as the exciting frequency departs from this resonance value.

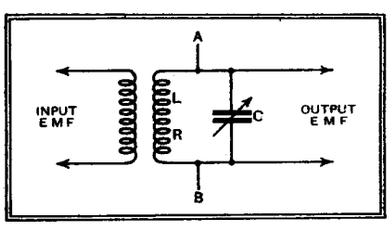

Fig. 1.—A simple tuned circuit.

We thus get a resonance curve (Fig. 2) which shows at a glance the selectivity of the circuit or circuits employed. The shape of the resonance curve depends on the value of m, the voltage magnification of the coil.

$$m = 2\pi fL/R, \text{ where}$$

f = resonance frequency in cycles/sec.
L = coil inductance in henrys.
R = HF resistance of coil in ohms.

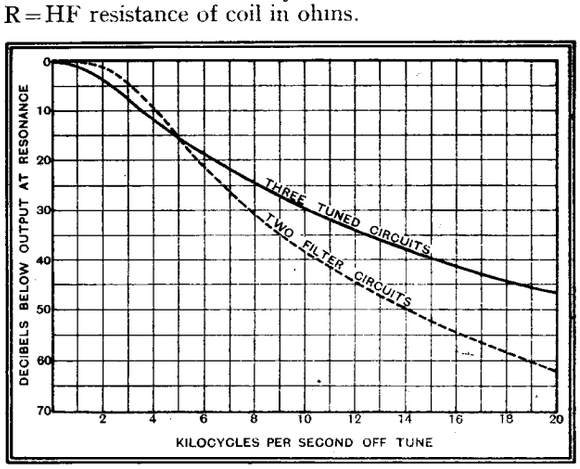

Fig. 2.—Resonance curves for a system of three simple tuned circuits and a system of two critically coupled band-pass filter circuits. m = 30. λ = 1,500 metres.

In other words, m = (coil reactance)/(coil resistance). The term "dynamic resistance" of a coil is sometimes used. This quantity is $[2\pi fL]^2/R$ and measures the impedance of the tuned circuit considered as a rejector circuit, i.e., the resistance at resonance between the points A and B. (Fig. 1). Note that m = (dynamic resistance)/(coil reactance). Coil magnifications of from 100 to 200 can be obtained with well designed unscreened solid wire coils when the coupling to the previous circuit is loose, but with commercial screened coils m may fall to 20 or 30. With closer coupling some of the energy in the tuned circuit spills back into the previous circuit and the result is as if the coil resistance were increased so that the coil magnification is decreased.

Tuned Circuits in Series

We may have a tuned circuit in each inter-valve stage. If all such circuits are similar and do not react with each other (as is the case when they are separated by screen-grid valves) the resultant resonance curve can be calculated. In fact if with a single tuned circuit the output voltage falls from unity at resonance to 0.5 at 4 kilocycles off resonance, it will fall to $0.5^2 = 0.25$ with two similar circuits and to $0.5^3 = 0.125$ with three circuits.

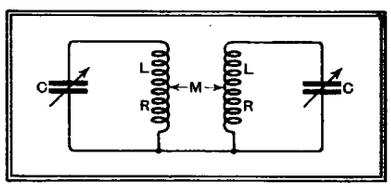

Fig. 3.—A typical two-element band-pass filter circuit.

The abac enables us to read off the voltage resonance curve for 1, 2 or 3 similar tuned circuits and for convenience a scale of decibels has been added.

Filter Circuits

The shape of the resonance curve is improved by use of a filter circuit instead of a single tuned circuit. A filter circuit gives higher transmission of the sidebands from the wanted station and cuts off an adjacent unwanted station more completely. In Fig. 2 a filter system is compared with a system of simple tuned circuits. Up to 5 kilocycles off tune the filter system gives better transmission, while at 20 kilocycles off tune it attenuates by 15 decibels more than the simple tuned system.

The performance of a filter circuit depends on two quantities: (1) the coil magnification $m = 2\pi fL/R$; (2) the coupling $2\pi fM/R$ (Fig. 3) where M is the mutual inductance between the circuits. Whether the coupling is by coils as in Fig. 3 or by capacity or by both, an equivalent circuit can always be drawn similar to that in Fig. 3*. For coupling greater than unity the output volt-

* For the design of filter circuits see *The Wireless Engineer*, October 1932, p. 546.

RADIO DATA CHART FOR DESIGNING COILS FOR A GIVEN SELECTIVITY.

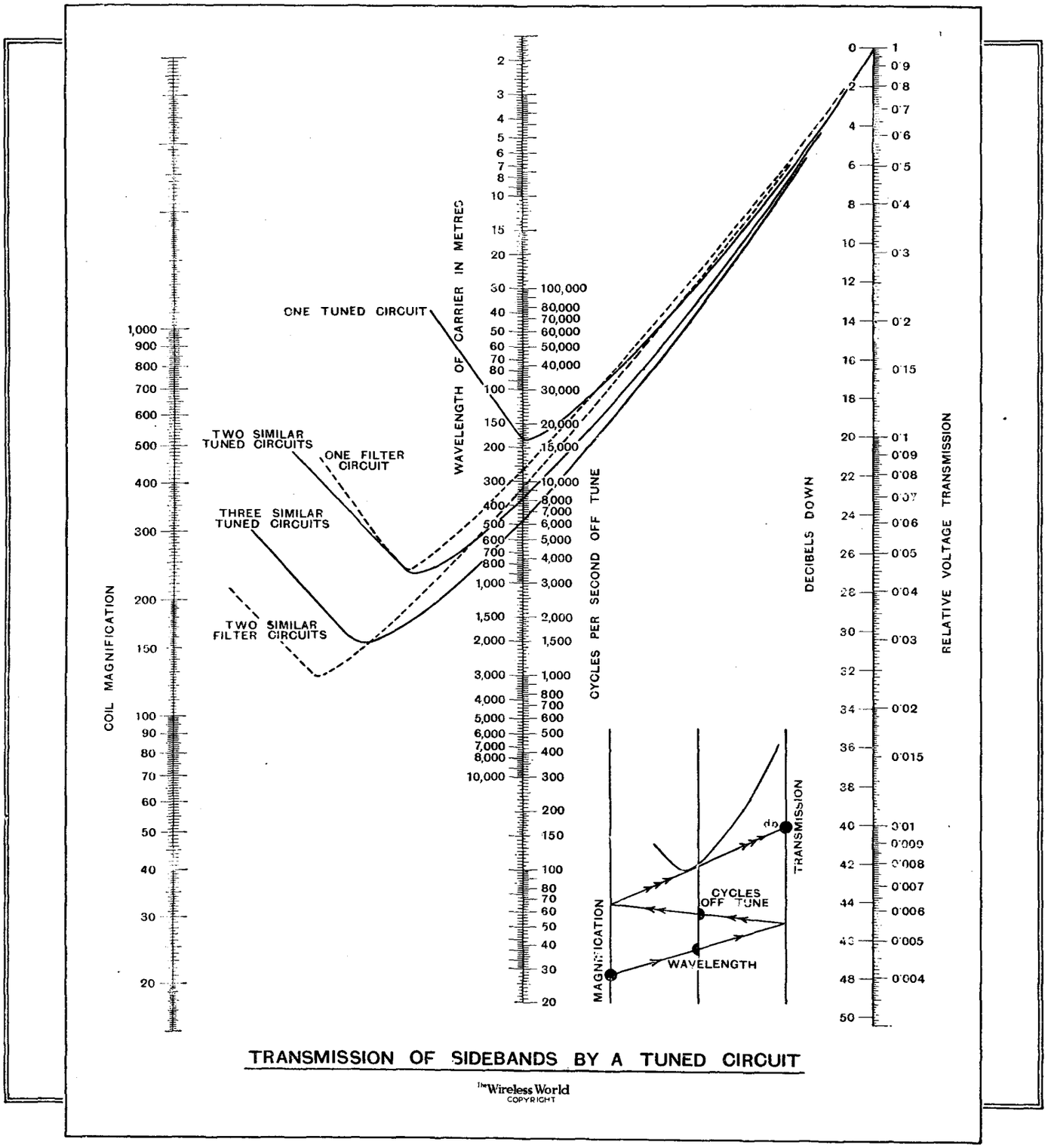

age at resonance is the same as for a single circuit of inductance L and resistance R, but peaks appear in the sideband region so that the curve has a double hump. If the coupling is less than unity the efficiency of transmission falls off. On the whole it is preferable to use critical coupling (coupling equal to unity) and the abac is constructed with reference to filter circuits which are critically coupled so that $2\pi FM/R = 1$.

Examples

(1) A single tuned circuit is used on a wavelength of 300 metres. The coil magnification is 100. What are the relative voltage outputs at 2, 5 and 10 kilocycles/sec. off tune?

Taking the voltage output signal on tune as unity we get 0.928, 0.707, 0.447 for the relative outputs at the given off-tune frequencies.

(2) Two similar critically coupled filter circuits in series are used on a wavelength of 600 metres. The coil magnification is 50. What are the output losses in decibels at 2, 5 and 10 kilocycles/sec. off tune?

0.22, 6.03, 24.6 decibels below the level at resonance.

Foundations of Wireless

By
A. L. M. SOWERBY, M.Sc.

Part XXVIII.—Detection and AVC

AUTOMATIC volume control (AVC) aims at desensitising the HF or IF amplifier of the receiver progressively as signal strength increases, thus maintaining constant volume, irrespective of the strength of incoming signals. The operation of the various systems—plain, delayed, amplified, and corrected—are explained in this Part.

THE frequency-changer and the intermediate-frequency amplifier are, theoretically speaking, the only stages peculiar to a superheterodyne. There is no reason why detection and LF amplification should not follow exactly as in a straight set, with the sole difference that the anode-cathode bypass condenser of a triode detector will need to be larger to allow for the lower carrier frequency.

Although a few superhets do end up with a grid detector and output stage, it is becoming usual to take advantage of the high available pre-detector amplification to provide automatic volume control (AVC). The principle of this is that the carrier reaching the second detector provides, by virtue of the process of rectification, a steady voltage which is used to bias back the earlier amplifying valves, so reducing their gain. For this reduction in gain to be effective it is evident that the peak voltage of the signal reaching the detector must be able to rise, without producing distortion, to a value equal to the bias required to reduce the gain of preceding valves to a low figure. This voltage may amount to 15 volts or more; it is quite certain that no detector other than a diode can possibly handle voltages of this order.

Fig. 148 gives a simple AVC circuit, in which the diode V2 serves both as second detector and as generator of the AVC voltages. The signal applied from the secondary of the IF transformer T across anode and cathode of V2 is rectified in the usual way with the aid of the condenser C and the leak R, the latter being in the form of a potentiometer from which any desired portion of the total LF voltage across it can be conveyed to the LF amplifying valve. The flow of electrons through R on their way from anode to cathode of V2 makes the "live" (unearthed) end of R negative to an extent substantially equal to the peak voltage of the applied HF signal that is driving the current. This voltage is fed back to the grid of V1, the filter made up of R1 and C1 being interposed in the path to prevent carrier - frequency and low-frequency voltages from being also fed back along the same path.

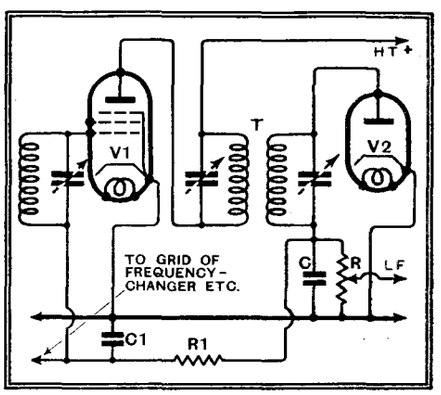

Fig. 148.—Skeleton circuit of simple AVC arrangement. The DC voltage produced by signal rectification by V2 is used for control bias.

If we make the assumption that a bias of 15 volts on V1 (and other pre-detector valves not shown in the diagram) will be required to reduce their amplification sufficiently to enable them to handle local-station signals, it is evident that when the station is tuned in, the peak IF voltage applied to V2 will have this value. Further, it is evident that any station inducing a lesser voltage in the aerial will give rise to some lower voltage at V2.

If the degree of LF amplification following V2 is such that 5 volts (peak) of signal is required at that valve to provide full output at the loud-speaker, it will be impossible to obtain full-strength signals without at the same time applying 5 volts of bias to all pre-detector valves. If there are two of these, and each has its slope reduced to one-tenth of its maximum value by the application of this bias, the sensitivity of the set will be one-hundredth of its maximum value. This means that all stations weaker than this are prevented from giving full output, even though the set would have adequate sensitivity to receive them properly if it were not for the interposition of the AVC system.

Fig. 149 shows, diagrammatically, the type of relationship between input signal and voltage at V2 that would be given by a circuit like that of Fig. 148. As soon as the initial insensitivity of the detector is overcome, the rectified voltage applied as bias begins to reduce the sensitivity of the set, so that the climb in output with rising input becomes very slow. The dotted line shows how the output voltage would rise if, in the absence of the AVC system, the amplification of the set remained constant irrespective of the signal applied.

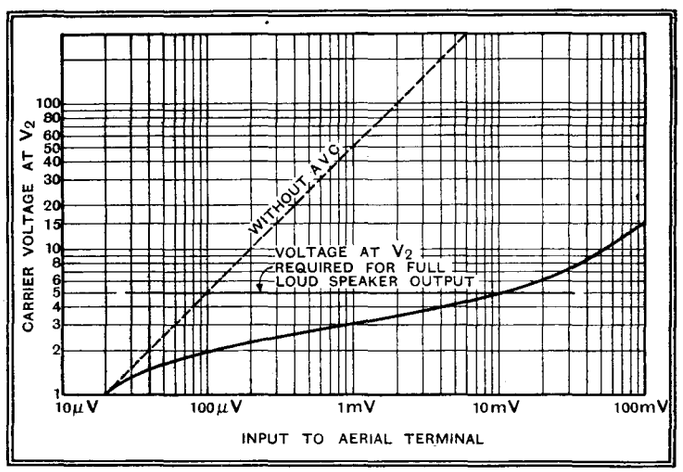

Fig. 149.—AVC curve for system of Fig. 148. Note that if 5 V. at V2 is wanted for full output, the AVC is unnecessarily limiting output on all inputs from 20μV to 10 mV.

It is fairly clear that the full useful sensitivity of the set could be regained if the LF amplification succeeding the detector were raised until 1 volt at V2 provided signal enough to load up the output valve, for at this voltage the AVC has barely begun to reduce the sensitivity. But if this were done, we should find that at the other end of the scale the output would rise to excessive values, for 15 volts bias, and with it 15 volts of signal, would still be produced by tuning in the local station. In spite of the AVC system, drastic use of the volume-control would still be required on tuning from a near to a distant station, for the ratio of maximum to minimum output would be 15^2, or 225 to 1.

If we can arrange that the signal-volt-

Foundations of Wireless—

age is always greater than the AVC voltage, we can reduce this ratio very considerably. Suppose that the signal is allowed to rise to 5 volts before the AVC system begins to operate; then, as 15 volts of bias will still be wanted for the local station, the signal it gives at the second detector will be 20 volts. On the assumption that the post-detector gain is so arranged that 5 volts at the detector fully loads the output valve, we now have a voltage ratio of 4 to 1 from loudest to faintest station, or a power output ratio of 16 to 1, in place of the 225 to 1 of the circuit of Fig. 148.

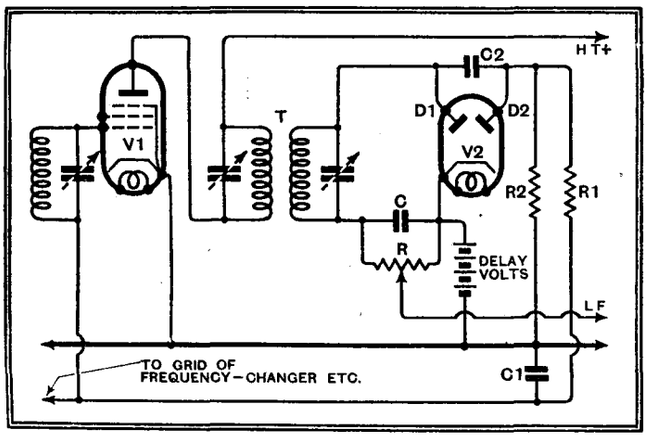

Fig. 150.—Modification of Fig. 148 to produce delayed AVC. Until the peak voltage of the signal exceeds the positive bias on the cathode of V2, the AVC system does not begin to operate.

Delayed AVC

This very considerable improvement can be realised in practice by the circuit of Fig. 150. So far as the signal-circuits are concerned, this is identical with Fig. 148. Detection now takes place at one anode D1, of a double-diode valve, the leak being returned, as before, to cathode. The signal is also applied, through the condenser C2, to the second diode D2, whose leak R2 is returned to the earth-line. By means of the battery shown, the cathode of V2 is made positive with respect to earth, with the result that rectification at D2 does not commence until the positive peaks of the HF signal run this electrode up to a voltage at least equal to that applied to the cathode.

If we make the cathode of V2 positive by 5 volts and apply a 5-volt (peak) signal we can then adjust the post-detector gain until the rectified output just loads up the output valve. With this signal the AVC diode D2 is just about to begin to rectify; the signal is therefore allowed to build up to full output without interference from the AVC system, which then immediately starts work and tends to prevent any further rise. For a set so adjusted the AVC curve, carried on to 15 volts bias (=20 V. signal minus 5 V. delay) will be of the type shown in the lowest curve of Fig. 151.

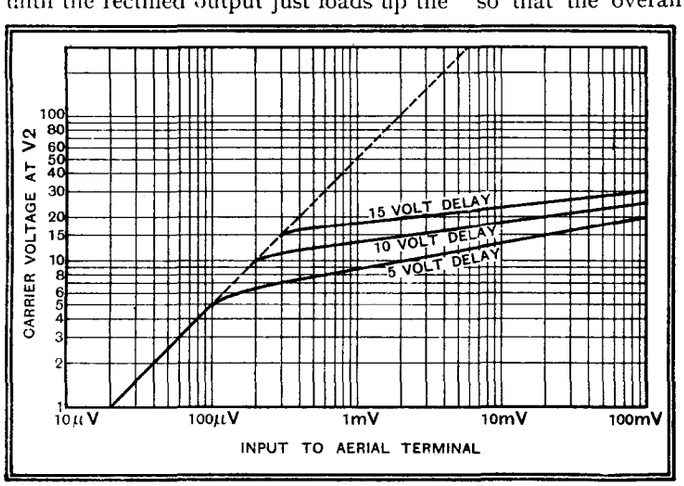

Fig. 151.—AVC curves for circuit of Fig. 150. Note that the larger the delay the flatter the curve, as explained in the text.

The two other curves represent the response of sets having delays of 10V. and 15V. respectively, and it will be clear that as the delay increases so does the perfection of the AVC system. With 15V. delay the signal rises from 15V. to 30V.—a 2 to 1 ratio only—for the required increase in AVC bias from zero to 15 volts. Higher delay evidently involves decreasing the post-detector gain, so that the overall sensitivity of the set drops in proportion to the delay.

The simple AVC system of Fig. 148 is practically never used, owing to the disadvantages described, but delayed AVC produced as in Fig. 150 is used in the majority of modern sets. In place of using the battery shown, the cathode of the double diode is made positive by connecting it to some point of suitable potential elsewhere in the circuit—usually to the cathode of the output valve.

Owing to the desirability of a large delay it is quite common to allow the signal-rectifier to supply the output valve direct, without intermediate amplification. If a high-slope indirectly-heated pentode is used, requiring about 4½V. peak signal, and a delay-voltage of 15V. is provided, the output valve will be fully loaded on a carrier 30 per cent. modulated. Alternatively, the delay may be decreased a little, and enough amplification provided after the detector to allow a low-slope pentode or even a triode to be used as output valve. In this case it is usual to employ a double-diode-triode which, as its name implies, combines a double diode for detection and AVC with a triode for subsequent amplification, all being built into the same bulb.

When it is desired for any reason to work with a signal of the order of 1 volt at the detector, it is usual to provide *amplified AVC*, in which the rectified voltage is amplified before being fed back to earlier valves. This is done with the aid of a double-diode-triode in some such manner as shown in Fig. 152. As before, the signal is rectified by the diode D1, with the leak R returned to cathode. The signal is passed for amplification to the grid of the triode, to which is connected the "live" end of R. The amplified signal is applied in the usual way to the grid of the output valve.

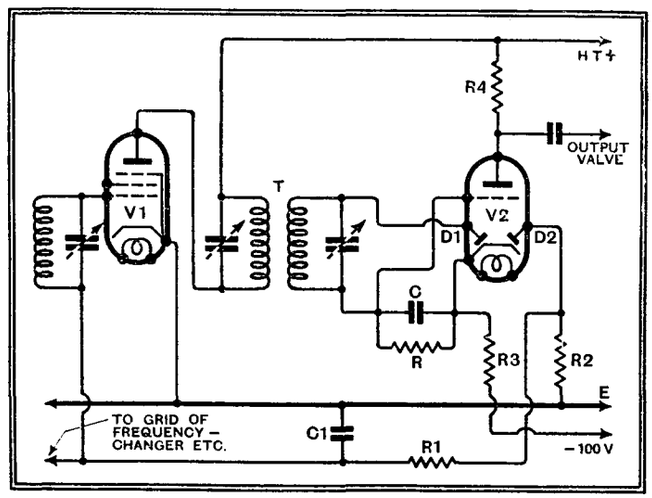

Fig. 152. — Amplified AVC, with delay. Initially positive, the cathode of V2 is driven down to earth potential by the grid bias generated by rectification at D1. At this point D2 begins to draw current, and AVC starts work.

The cathode of the DDT is connected, through a resistance R3, to a point some 100 volts negative with respect to the general earth-line of the set. R3 and R4 are so chosen that with no bias on V2 other than that generated by grid-current through R the cathode is some 30 volts positive with respect to earth. When a signal is rectified by D1 the resulting steady negative voltage, as well as the LF signal, reaches the grid of the triode. This negative bias reduces the anode current of the valve, thereby reducing the voltage-drop across R3 and tending to make the cathode negative. If the amplification is thirty times, a one-volt signal on D1 will drive the cathode from +30V. to earth potential. A further half-volt will drive it down to −15V. The diode D2, connected to earth through the high resist-

Foundations of Wireless—

ance R2, takes no current so long as the cathode is positive, but as soon as the cathode reaches earth-potential current begins, the impedance cathode – D2 drops to a negligible value, and D2 follows the cathode downward in potential. Signals up to 1 V. on D1 therefore generate no AVC bias, and the set remains at full sensitivity, but by the time the signal reaches 1½ V. the full bias of 15 V. is produced on D2 and fed back to earlier grids in the usual way.

Thus, by this system, the very level AVC curve corresponding to a 30-volt delay in Fig. 151 can be produced from a 1-volt signal.

By suitably increasing the positive potential of the cathode of the DDT, and increasing the signal voltage to correspond, almost perfect AVC can be produced. It is possible to have a 10-volt delay (cathode at +150 V., amplification 15) followed by a rise in AVC volts to the required 15 on increase of the signal from 10 to 11 volts. The AVC curve for a system of this sort is a very close approach to the ideal, in which the dotted line of Fig. 149 or 151 would be followed up to the point at which full loud-speaker strength was reached, after which there would be no further rise in output, no matter how greatly the input were increased.

AVC in the LF Amplifier

In all the methods of AVC so far discussed the signal at the second detector must rise, if only a little, to provide the increasing bias for the earlier valves. So long, therefore, as constant LF amplification follows the detector perfect AVC cannot quite be attained. If, however, one of the LF valves has its gain controlled by the AVC system it becomes possible to compensate exactly for the inevitable rise in signal at the detector.

A system of this sort is sponsored by one of the valve-makers, whose circuit is given, with minor modifications, in Fig. 153. In essence, the circuit repeats that of Fig. 150. D1 is the signal rectifier, the required portion of the rectified signal being passed through a condenser to the grid of a pentode in the same bulb. D2 provides ordinary delayed AVC, the delay being provided by the voltage-drop across the cathode resistor. The grid-leak of the pentode is returned, through a resistance-capacity filter, to the AVC line.

As the AVC voltage increases, the gain afforded by the pentode is reduced, just as is the gain of the pre-detector stages.

By correct choice of voltage and resistance values it is possible to make the system as a whole pass the same LF voltage to the output valve over a range of input voltages running from that necessary to overcome the delay up to that which will produce 20 volts bias for the AVC line. The delay-voltage, and hence the minimum signal before level output is attained, has the convenient value of about 2 volts.

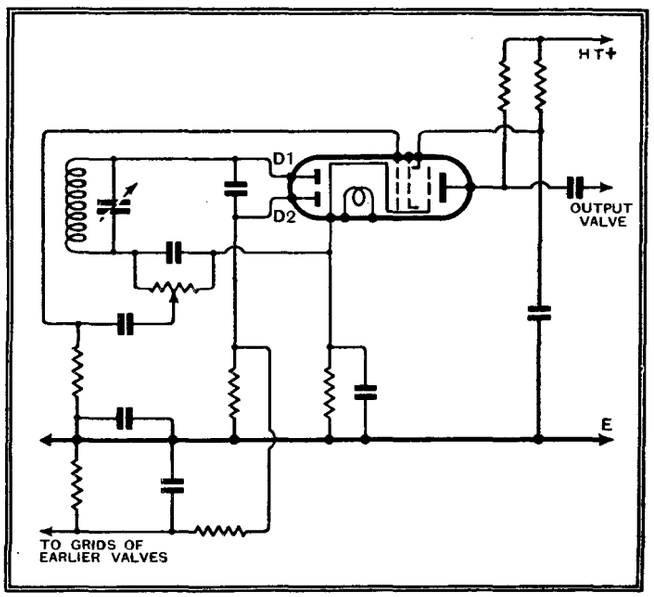

Fig. 153.—Corrected AVC, with delay, using DD pentode. The pentode, used as an LF amplifier, has its grid returned to the AVC line, so that as the rectified signal increases the LF gain falls in compensation.

Celestion Speakers

A New Range of High-grade Extension Units

With the object of raising the standard of quality in extension loud speaker units a new range of high-grade Celestion cabinet models has been introduced for the coming season. A new permanent magnet of massive construction has been adopted in all models so that the sensitivity as well as the quality of reproduction will be at least equal to that of the original loud speaker fitted to the set.

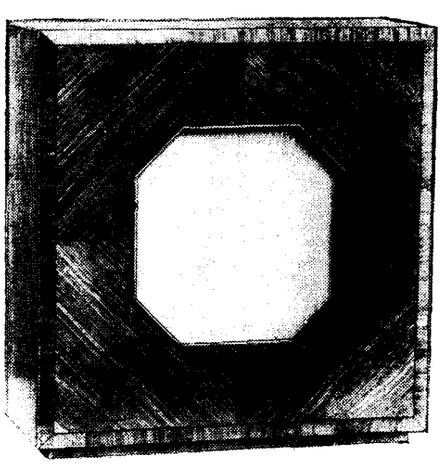

Cabinet of the new Celestion Junior Auditorium high-grade extension loud speaker.

After a careful survey of the average matching conditions required by the leading makes of receivers a universal matching control has been designed which also serves as a volume control. A horizontal slider at the back of the unit is provided with nine contacts, in addition to an off position, and the control knob can also be rotated to meet the requirements of either high or low impedance outputs.

The units, with their transformers and switches, are all mounted in rigid die-cast housings and a very simple and attractive type of cabinet has been adopted which will harmonise with any style of furnishing.

The leading model is the Junior Auditorium at £7 15s., with a 10in. diaphragm, and this is supported by the Senior 9 and Standard 8 cabinet models at £4 10s. and £3 10s. respectively. The chassis of all these models can be supplied separately and there is an energised version of the Junior Auditorium chassis at £4 15s., as well as a Senior Auditorium at 15 guineas for DC and 18 guineas for AC mains. The range is completed by the Junior 8 chassis at 35s., which makes use of the new type of permanent magnet, but is not supplied with the new matching device.

Chassis of the Junior Auditorium Model.

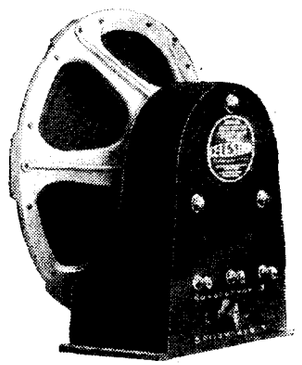

The distribution of the new models is in the hands of Cyril French, 29, High Street, Hampton Wick, Kingston-on-Thames.

The Wireless Vocabulary

TAKING them all round, the specialised words that we use when talking or writing about wireless are a pretty mixed lot, and some of them seem to be rather bad misfits. Loud speaker, for instance. This expression was invented as a shortened form of loud-speaking telephone. It was perfectly applicable so long as the instrument was chiefly used for reproducing speech, but it hardly seems a suitable description of the device employed in our wireless sets for delivering music more often than the spoken word. You can hardly *speak* an orchestral number or a violin solo!

Then there is that curious expression "high-tension" battery, which we seem to have borrowed from the French. Tension, with its idea of stretching, is very little used in English nowadays with any such sense; "high-pressure" or "high-potential" battery would be a better description. "Valve" was a good enough term for the diode or for the triode when used as a detector; but it doesn't quite suit the high-frequency or low-frequency amplifier. To give one other instance, the term "rectifier," which is used both of the valve which converts radio into audio frequencies in the receiving set, and of that which changes alternating current from the mains into direct, is liable to lead to a certain amount of confusion.

The Wireless World
THE PRACTICAL RADIO JOURNAL
25th Year of Publication

No. 830. FRIDAY, JULY 26TH, 1935. VOL. XXXVII. No. 4.

Proprietors : ILIFFE & SONS LTD.

Editor :
HUGH S. POCOCK.

Editorial,
Advertising and Publishing Offices :
DORSET HOUSE, STAMFORD STREET,
LONDON, S.E.1.

Telephone: Hop 3333 (50 lines).
Telegrams: "Ethaworld, Sedist, London."

COVENTRY : Hertford Street.
Telegrams: "Autocar, Coventry." Telephone: 5210 Coventry.

BIRMINGHAM :
Guildhall Buildings, Navigation Street, 2.
Telegrams: "Autopress, Birmingham." Telephone: 2971 Midland (4 lines).

MANCHESTER : 260, Deansgate, 3.
Telegrams: "Iliffe, Manchester." Telephone: Blackfriars 4412 (4 lines).

GLASGOW : 26B, Renfield Street, C.2.
Telegrams: "Iliffe, Glasgow." Telephone: Central 4857.

PUBLISHED WEEKLY. ENTERED AS SECOND CLASS MATTER AT NEW YORK, N.Y.

Subscription Rates :
Home, £1 1s. 8d. ; Canada, £1 1s. 8d. ; other countries, £1 3s. 10d. per annum.

As many of the circuits and apparatus described in these pages are covered by patents, readers are advised, before making use of them, to satisfy themselves that they would not be infringing patents.

CONTENTS

	Page
Editorial	73
The 1936 Monodial A.C. Super	74
Current Topics	78
An Interesting Austrian Receiver	79
The Universal Receiver	81
This Empire Broadcasting	82
Radio Data Charts VII	84
Unbiased	87
Listeners' Guide for the Week	88
McMichael 235 Receiver Reviewed	90
Broadcast Brevities	92
New Apparatus Reviewed	93
Foundations of Wireless (Concluded)	94

EDITORIAL COMMENT

Interference

Urgency of Remedial Measures

SOME of our readers may ask why it is that we attach so much importance to the reduction of electrical interference. Those who adopt such an attitude must be in the fortunate position of living in a district where such troubles are absent and can have no conception of the appalling noise which some listeners have to put up with and which in many cases, we fear, the listener believes is inevitable and therefore accepts as "part of the wireless."

What is, perhaps, even more surprising than the apathy of the authorities, to which we drew attention last week, is the small amount of interest which individual set manufacturers and the Radio Manufacturers Association appear to pay to the problem. To the manufacturers it should be of the greatest possible importance. Of what use is it for them to produce sensitive and high quality sets so long as the listeners' reaction to them is likely to be only disappointment ? Any set designed for good response at the upper frequencies suffers more from electrical noise than one of poorer design, because at low frequencies the intensity of the programme is sufficient to mask the interference but is no longer able to do so at the high frequencies, where the sound output is weak.

The menace of electrical interference is growing all the time. The most modern appliances, even for domestic use, are often very bad offenders, and the use of electricity is increasing at a phenomenal rate. To take steps to suppress it now will be much cheaper than will be the case if there is delay. Even now it can hardly be hoped that legislation could do more than provide for all future electrical installations to be interference-free and to bring about a reduction in the case of existing apparatus over a reasonable period.

Our former esteemed Postmaster-General Sir Kingsley Wood introduced many improvements into the public service which the Post Office renders. We hope his successor in office will lose no time in tackling this question of electrical interference with broadcast reception, which has become a matter of concern to millions of listeners.

A New Monodial

An Outstanding Modern Design

THE WIRELESS WORLD Monodial series of receivers has achieved well merited fame, and the best testimonials of their performance come from thousands of readers who have made them.

We feel confident, therefore, that the 1936 Monodial Super, described in this week's issue, will rival its predecessors in popularity.

Every modern improvement in superheterodyne design has been critically tried out in the *Wireless World* laboratory, and the present design is the result of incorporating every worthwhile idea available.

One of the most important features included is variable selectivity, which is so essential in a receiver where really high quality is required from the local station with ability to receive distant transmissions without interference from adjacent stations.

Automatic volume control with silent background when tuning from one station to another is achieved, and a visual tuning indicator serves to ensure that accurate tuning is obtained.

There are many other points of interest which will be discovered by those who study the design, and as regards quality, even response on local reception is provided for up to 8,000 cycles.

The Wireless World 1936 Monodial AC Super

A Highly Sensitive Quality Receiver with Variable Selectivity and QAVC

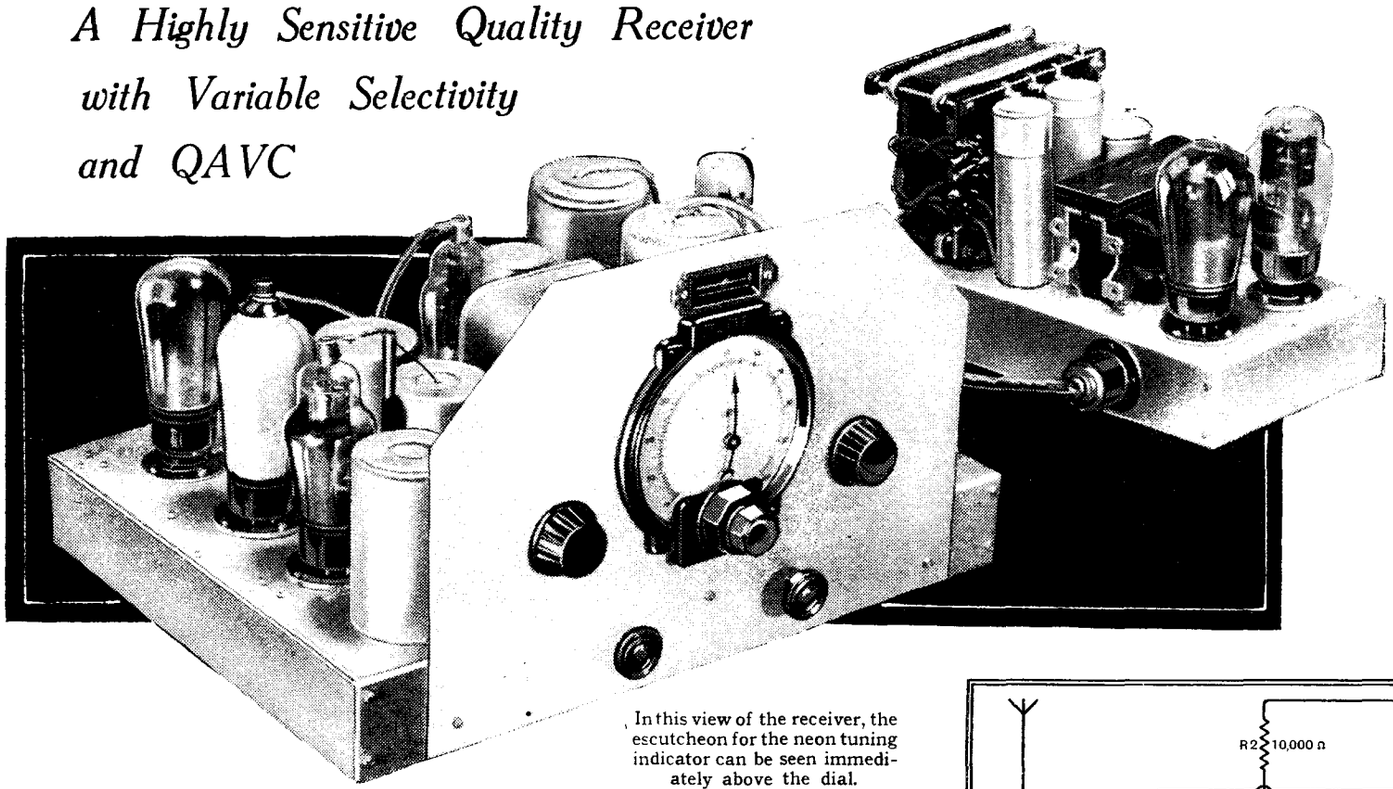

In this view of the receiver, the escutcheon for the neon tuning indicator can be seen immediately above the dial.

THE characteristics of a receiver intended to give the best results under the widely varying conditions involved in any but local reception have been discussed in detail in recent issues of *The Wireless World*, and it was shown that variable selectivity is essential to the attainment from every station of the highest standard of reproduction possible under the particular interference conditions existing at the moment of reception. Without variable selectivity, the quality is usually poorer than it need be or the interference is greater, for a fixed degree of selectivity can suit only particular conditions.

Variable selectivity is most readily obtained at an intermediate frequency which lies between the two wavebands devoted to broadcasting, and such a frequency has the further advantage of reducing the amount of pre-selection necessary for the elimination of second-channel interference, even under poor receiving conditions. A signal-frequency HF stage is desirable in order to keep background hiss at a minimum, while an efficient frequency - changer operating under optimum conditions is important.

The complete circuit diagram of the receiver unit is shown in Fig. 1, and it will be seen to include a total of six valves of which one is employed for signal-frequency amplification and another for the frequency-changer. Two valves are used in the IF amplifier, the first providing amplification only and the second both amplification and automatic volume control. The fifth valve is a combined detector and LF amplifier, while the sixth provides the muting action of QAVC.

The Signal-frequency Circuits

The HF valve is an HF pentode of high internal AC resistance and mutual conductance, and it is preceded by a single tuned circuit, the coil of which is tuned by one section C3 of the three-gang condenser. The medium- and long-wave coils are connected in series in the usual manner, and on the medium waveband the long-wave section is short-circuited by the switch S2. Separate windings are used for the aerial circuit, and here, again, the long-wave coil is short-circuited on the medium waveband by the switch S1. A condenser C1 of 0.0002 mfd. capacity is included in series with the aerial and serves to reduce the effective coupling to the correct degree for this receiver. The use of this condenser also permits the circuit conditions to be readily changed by altering the value of C1 should the use of

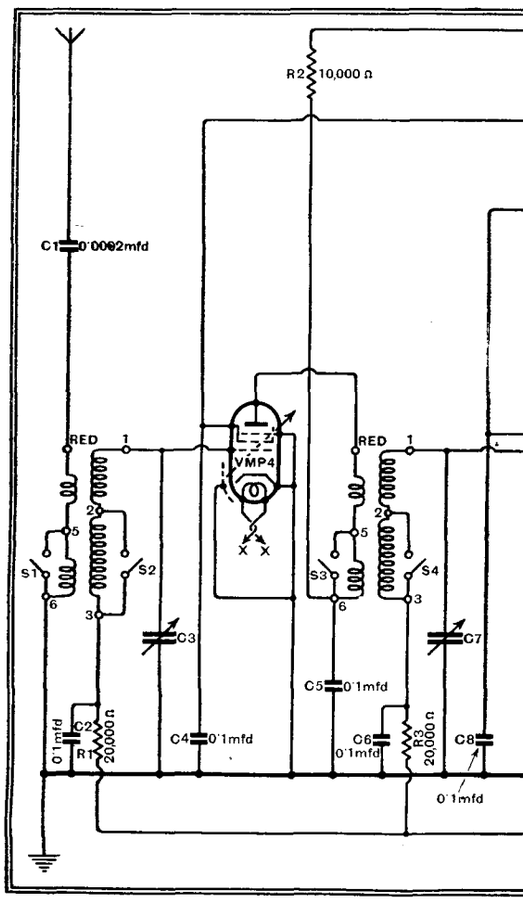

Fig. 1.—The complete circuit diagram of the rece

an unusual type of aerial render this desirable. The cathode of the HF valve is earthed, and the grid potential is derived from the AVC line through the 20,000 ohms resistance R1, the 0.1 mfd. condenser C2 acting to complete the tuned circuit and to provide decoupling in conjunction with R1.

The coupling between the HF and frequency-changer valves is by means of an HF transformer having a secondary circuit identical with that preceding the HF valve, and tuned by the second section C7 of the gang condenser. As in the case of the first valve, the grid potential of the frequency changer is derived from the AVC line, and the decoupling components C6 and R3 are given identical values in order to ensure accurate ganging. The primary of the transformer has fewer turns than the secondary, in order to keep the stage gain at a reasonably low figure and to restrict the stray capacity effective in the secondary circuit. Wave-changing is accomplished by the two switches S3 and S4, which short-circuit the long-wave sections of the primary and secondary respectively, while the anode of the valve is decoupled by the 10,000 ohms resistance R2 and the 0.1 mfd. condenser C5.

For the frequency-changer the new triode-hexode valve is employed, and this is really two valves in a single envelope—a hexode acting as a mixer and a triode functioning as an oscillator, the coupling being electronic. The oscillator circuit is entirely conventional, its apparent complexity being due merely to the ganging arrangements. It is of the grid leak type, the grid condenser C9 having a capacity of 0.0001 mfd. and the leak R5 a value of 50,000 ohms. The coil is so designed that the reaction coil does not need switching, so that the anode circuit of the valve is quite straightforward, decoupling and the maintenance of the correct voltage being secured by means of R6 and C18. The 2,000 ohms resistance R4 is included in order to prevent large changes in the amplitude of oscillation with the tuning.

The details of the tuned circuit in the oscillator grid circuit will repay careful examination. This circuit must at all times be tuned to a frequency 465 kc/s higher than the two signal-frequency circuits, and the various condensers shown on the diagram are necessary to achieve this. Wave changing is accomplished by S5 and S6, which are actually incorporated in a single switch. When S6 is closed S5 is open, and vice versa, and S6 closes at the same time as S1, S2, S3, and S4. This is for the medium waveband, and it will be seen that the medium wave coil between terminals 1 and 2 of the coil assembly is then connected directly to the earth line. This coil has an inductance of 71.5μH. as compared with 163.5μH. for the signal-frequency coils, and it is tuned by the third section C13 of the gang condenser—a section which has connected in series with it the padding condensers C10 and C11. Of these C10 is an adjustable trimmer with a maximum capacity of some 240 $\mu\mu$F., while C11 is a fixed condenser of 500 $\mu\mu$F. By the use of the two condensers in this way the range of capacity is limited, and while it is possible to adjust it to exactly the required value, it is impossible for the circuit to be very widely out of adjustment. If a single trimmer of high capacity were employed, this would not be the case, and the initial adjustments would become more difficult. The parallel trimmer for this waveband is not shown on the circuit diagram, since it is a part of the gang condenser and appears across C13 just as the

THE attainment of the highest standard of both selectivity and quality demands the possibility of varying the selectivity to suit receiving conditions. Recent articles in "The Wireless World" have dealt at length with the necessity for variable selectivity and it is included in this latest model of the Monodial. In addition, the features include an efficient AVC system together with an automatic muting circuit for inter-station noise-suppression, while an unusually high degree of pre-selection is used to avoid difficulty from heterodyne whistles.

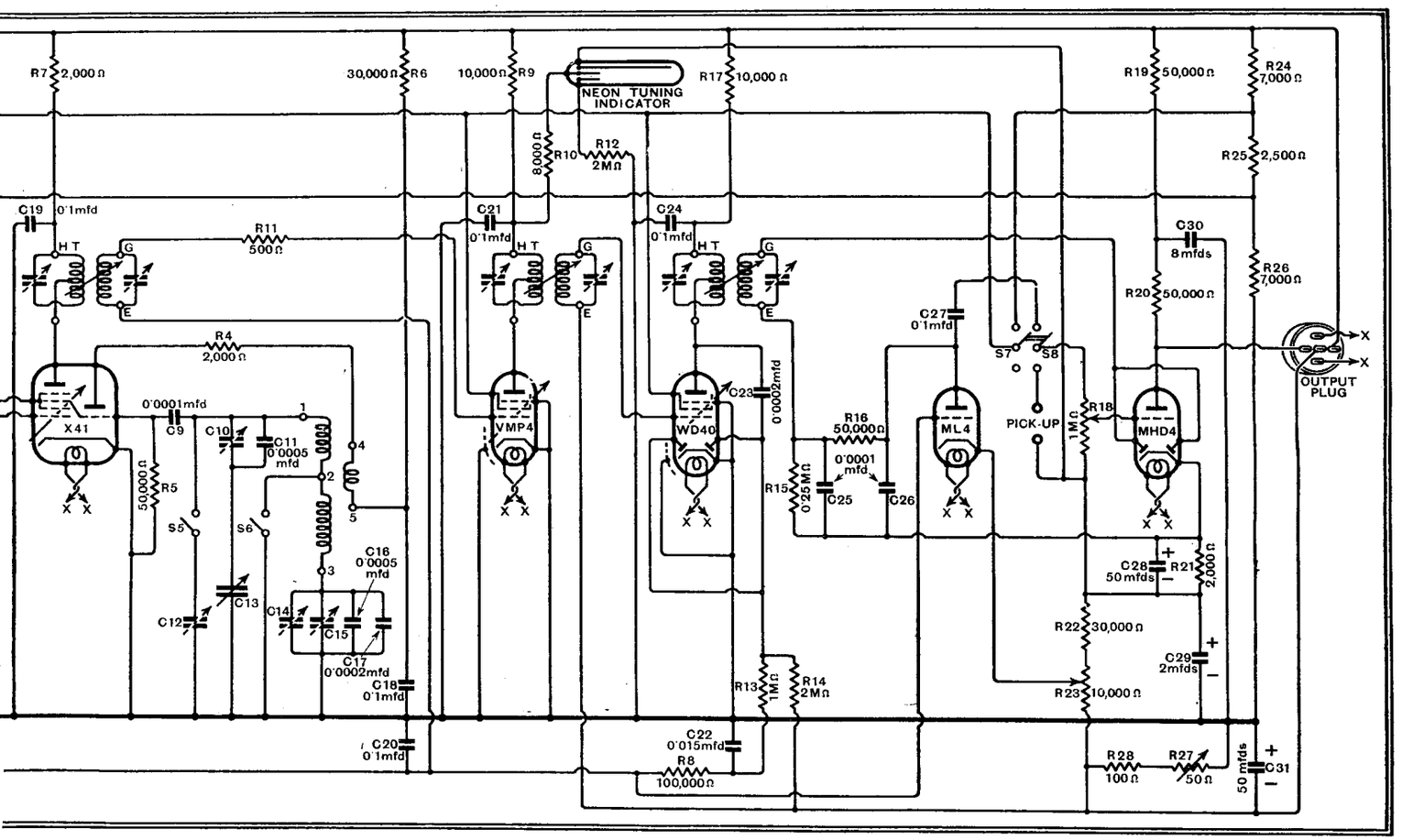

unit is shown here. The muting valve is controlled from the AVC system and operates to bias the detector negatively in the absence of a signal.

1936 Monodial AC Super—

other trimmers appear across C3 and C7.

On the long waveband S6 is open and S5 closed; the oscillator inductance is then 196.5 μH. as compared with 2,190 μH. for the pre-selector. No provision for ganging on this waveband is considered necessary in the signal-frequency circuits, in accordance with the usual practice, but both the series and the parallel capacities must be changed in the oscillator circuit. The parallel capacity must be increased by some 157 μμF., and the trimmer C12 of 240 μμF. maximum capacity is accordingly switched in circuit. The padding capacity required is less than on the medium waveband, so that it is possible to insert the long-wave condenser in series with it and thus save switching. The combination of condensers C14, C15, C16, and C17 is employed. Of these, the two first are trimmers, but only one is used as such, the other being screwed up and used as a fixed condenser. In addition to these, a capacity of 0.0007 mfd. is needed, and as this is not a standard value two condensers in parallel are used, C16 of 0.0005 mfd. and C17 of 0.0002 mfd.

The IF Amplifier

Coupling between the oscillator and mixer is obtained in the valve, and the intermediate frequency appears in the hexode anode circuit, in which is connected the primary of the first IF transformer, decoupling being obtained by means of the 2,000 ohms resistance R7 and the 0.1 mfd. condenser C19. The secondary of the transformer feeds the first IF valve through a 500 ohms resistance R11, which serves to prevent parasitic oscillation; the lower end of the tuned circuit is returned to the AVC line, decoupling being provided by the 100,000 ohms resistance R8 and the 0.1 mfd. condenser C20. Another transformer of identical characteristic couples the two IF valves, of which the first is an HF pentode and the second the combination of an HF pentode and a duo-diode. This second stage is not controlled for AVC purposes, so that the low potential side of the transformer secondary in its grid circuit is returned to negative HT; as the cathode is taken to the earth line which is about 3 volts positive with respect to this point, a fixed negative grid bias of some 3 volts is obtained.

The two diodes in this valve are strapped together and used to provide the AVC voltage. They are fed from the anode circuit through the 0.0002 mfd. condenser C23 and their load resistance R14 of 2 megohms is taken to negative HT. A filter stage comprising the 1 megohm resistance R13 and the 0.015 mfd. condenser C22 is connected as closely to this valve as possible in order to prevent feedback effects occurring along the AVC line. It will be seen that in the absence of a signal the first four valves all have the same initial bias, and that this voltage is applied also as delay to the AVC diodes. When a signal is tuned in these conditions remain unaltered until the output of the second IF valve exceeds about 3 volts peak. Rectification then occurs in the diode circuit and a potential appears across R14 in such a direction as to make the diode anodes negative with respect to negative HT. The grids of the first three valves are connected to the diode anodes through the decoupling system, so that they acquire the same potential. As the output of the second IF valve increases, therefore, the potential across R14 increases, and also the negative bias on the controlled valves with the result that their amplification decreases. If only weak signals were involved the second IF stage could be controlled in addition to the others, but this is not permissible with a strong signal for severe overloading would be likely to occur.

The next valve in the chain is a duo-diode-triode which functions not only as the detector but also as an LF amplifier. The coupling between the IF valve and detector is by means of an IF transformer, which, like the other two, has variable coupling between its coils The three transformers are mechanically linked together and the coupling can consequently be altered by a single panel

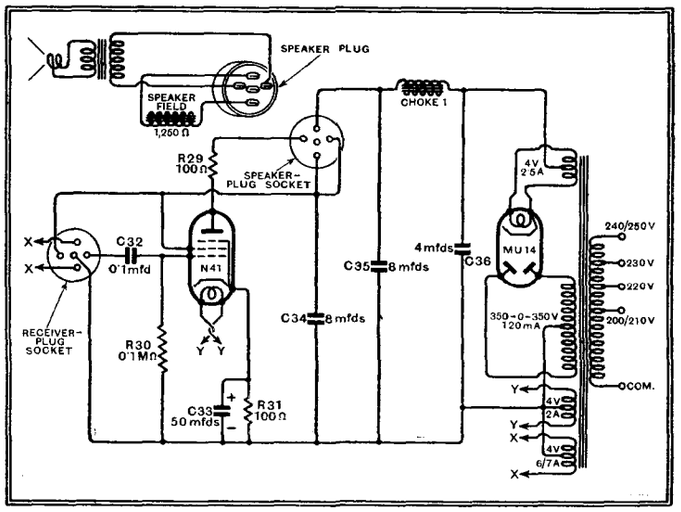

Fig. 2.—The power unit is of conventional design employing a high-efficiency pentode output valve.

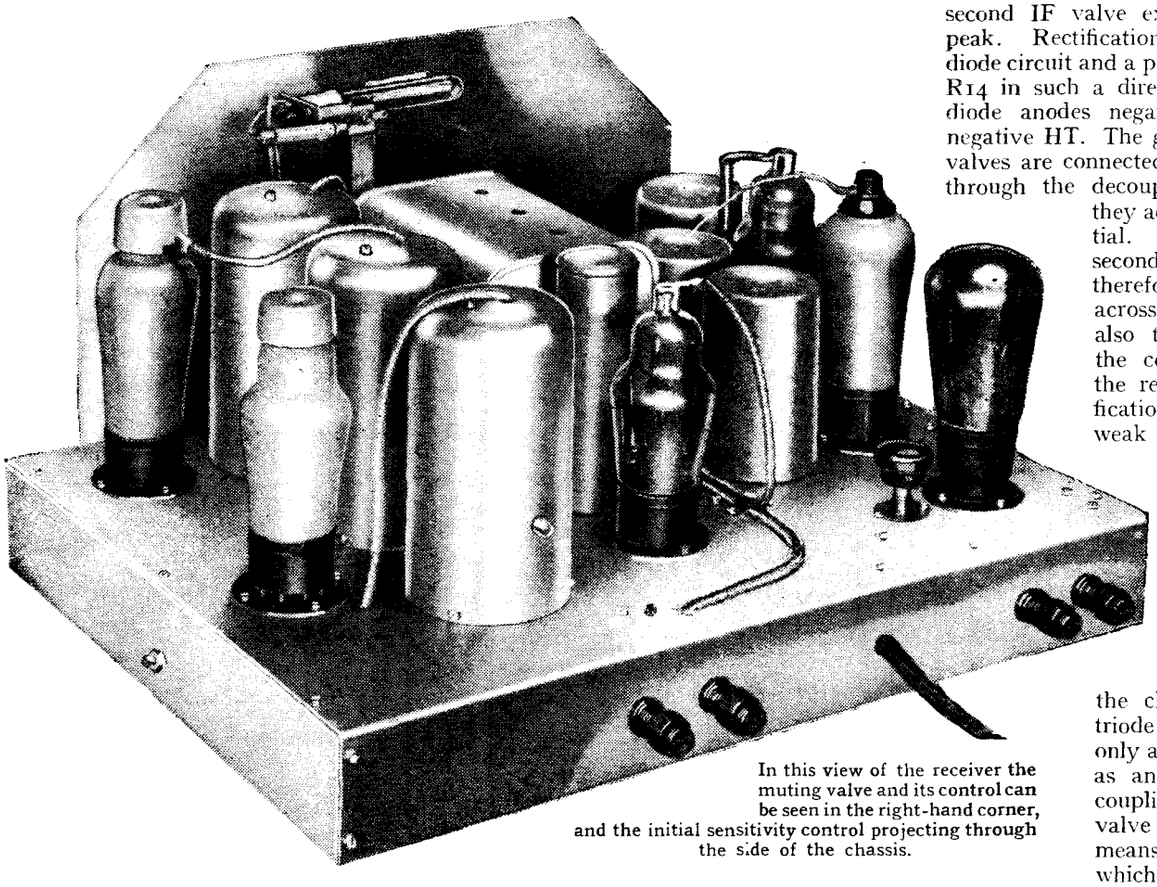

In this view of the receiver the muting valve and its control can be seen in the right-hand corner, and the initial sensitivity control projecting through the side of the chassis.

1936 Monodial AC Super—

control for variable selectivity. The two diodes of the duo-diode-triode are strapped together and act as the detector. The load resistance R15 of 0.25 megohm is returned directly to the cathode and the by-pass condenser C25 is given the usual value of 0.0001 mfd. In place of the HF choke normally employed in the filter circuit a resistance R16 of 50,000 ohms is used in conjuction with the 0.0001 mfd. condenser C26. The resistance provides adequate filtering and is less expensive than a choke.

The LF potentials which appear across R15 as a result of detection are communicated to the grid of the triode section of the valve through the 0.1 mfd. condenser C27 and the volume control R18. This volume control is given a value of 1 megohm, for in order to avoid detector distortion on deep modulation it is necessary for it to have at least 2.5 times the value of the detector load resistance. The control functions both on radio and on gramophone, the change-over being effected by S8, while S7 removes the screen voltage from certain valves to prevent interference from radio signals when operating on gramophone.

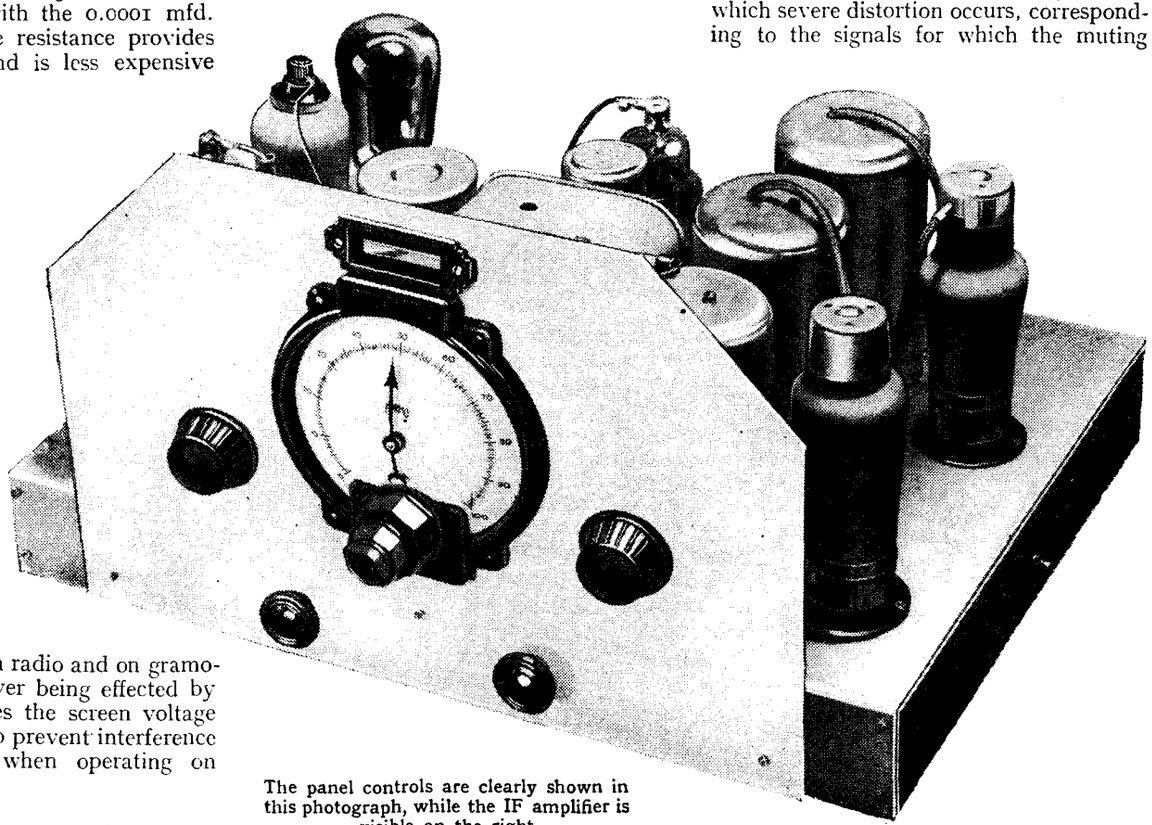

The panel controls are clearly shown in this photograph, while the IF amplifier is visible on the right.

The Muting Circuit

Grid bias for the LF valve is obtained from the voltage drop across the 2,000 ohms resistance R21 in its cathode circuit; this resistance is shunted by a 50 mfd. electrolytic condenser C28 in order to avoid feed-back effects. In the anode circuit a 50,000 ohms coupling resistance is used, and the grid of the pentode output valve (Fig. 2) is connected to the anode of the LF valve through the 0.1 mfd. coupling condenser C32. Decoupling of the LF valve is provided by the 50,000 ohms resistance R19 and the 8 mfd. condenser C30. The output stage is entirely conventional, using one of the high-efficiency pentodes giving an output of some 3.5 watts for a very modest signal input. The mains equipment also follows the usual practice, an indirectly heated rectifier valve being used with a 4 mfd. reservoir condenser C36. Initial smoothing is provided by Ch1 and C35, and final smoothing by the loud speaker field winding and C34. The loud-speaker field must have a resistance of 1,250 ohms.

The rectifier valve is an MU14 in spite of being fed only with 350 volts from the mains transformer. This valve has been selected because it has a lower resistance than one of 350 volts rating only, and it can consequently provide a somewhat larger rectified output while still employing a transformer of standard rating.

So far no mention has been made of the triode valve which is associated with the detector. This gives the muting action of QAVC and silences the set when it is not tuned to a station. The cathode of the detector is returned to negative HT through resistances totalling some 42,000 ohms so that its potential is about 45 volts positive. The anode of the muting valve is taken to the detector cathode through R15 and R16, totalling 300,000 ohms, and its cathode is taken to the slider of R23. Its grid is joined to the AVC line.

Now, in the absence of a signal the grid potential of this triode is the voltage existing between the slider of R23 and negative HT, and its anode is taken through its load resistance to the detector cathode, which is positive with respect to the triode cathode. The muting control R23 is adjusted to give potentials such that the triode passes anode current. This current passes through R15 and R16, and the triode anode is consequently negative with respect to the detector cathode, and as the diode anodes are joined to the triode anode through R16, they are negative with respect to their own cathode. The detector has thus a negative bias and is inoperative.

When a signal of sufficient intensity is tuned in the triode grid receives additional negative bias from the AVC system, and this reduces the triode anode current to zero, and so removes the negative bias from the detector and permits it to function normally. The precise signal strength at which the system operates is adjustable by R23, and a wide range of control is obtained. At one end of the travel of the slider no muting at all occurs, while at the other only a powerful local station will release the detector. The normal condition, of course, is such that with the set tuned to no signal background noise is just eliminated.

In common with all QAVC systems there is a certain range of signal strengths over which severe distortion occurs, corresponding to the signals for which the muting valve only partially releases the detector bias. This range of signals is small, and with the normal adjustment corresponds to very weak stations indeed; stations, in fact, whose level is so near that of the prevailing background noise that their programmes would, in any case, hardly prove of entertainment value.

The tuning indicator is of the neon type. As can be seen from the circuit diagram, one electrode is returned to the earth line through a 2 megohms resistance R12, and another is taken to the detector cathode to secure the requisite positive potential. The control electrode is joined to the first IF valve anode circuit, the change of voltage across R9 with changing AVC voltage causing an alteration in the glow from the tube.

High Tension Supply

The voltages for operating the valves are secured in the simplest manner from a voltage divider across the HT line of some 250 volts. This comprises the resistances R24, R25, R26, R27 and R28, and supplies of 100 volts for the screens of the HF and IF valves are available as well as 70 volts for the frequency-changer screen, and 3 volts for grid bias. This latter potential has been made adjustable by

1936 Monodial AC Super—

means of a pre-set type of variable resistance R27 in order that compensation may readily be obtained for the effects of the inevitable variations in valves and components. Were a fixed resistance to be used, abnormally low amplification might be found in some sets and instability in others, and the inclusion of this resistance renders it possible to adjust the amplification to the same degree in all receivers.

Turning now to the power unit, a pentode output valve is used and resistance-coupled to the preceding stage, the grid condenser C32 being given a capacity of 0.1 mfd. and the grid leak R30 a value of 0.1 megohm. Grid bias is derived from the voltage drop across the 100 ohms resistance R31 in the cathode circuit which is shunted by a 50 mfds. electrolytic condenser C33. A 100-ohms anti-parasitic resistance is included in the anode circuit.

(To be continued.)

A complete list of the component parts required to build this receiver will be found on a later page in this number.

CURRENT TOPICS

Events of the Week in Brief Review

Car Wireless

WHEN car wireless was first introduced many people jumped to the conclusion that it would constitute a new risk on the roads, but the Minister of Transport, after investigating the position very carefully, has decided that there is no evidence at present to justify such anxiety.

It is rather surprising, therefore, that in a speed limit case heard at Leeds the other day the Chairman of the Bench, according to a report, should have said that it was ridiculous to have a wireless set in a car, and that the defendant should get rid of it.

Warning to Broadcasters

THE United States Government has recently threatened to withdraw licences from a number of broadcasting stations because they have allowed advertisements to be broadcast for a slimming preparation regarded by the medical profession as unsafe. It is even suggested that this may be the prelude to efforts to institute a regular censorship of sponsored matter broadcast from stations all over the United States.

Leipzig and Cologne Interval Signal

SINCE July 1st Leipzig has abandoned the well-known B-A-C-H interval signal, and has adopted a series of three chords in D Major instead. These are produced by the well-known musical box apparatus used at most German stations.

A somewhat similar signal has been adopted by Cologne.

Institute of Physics

THE Board of the Institute of Physics, at the request of a number of Corporate members resident in the Midlands, has created a Local Section of the Institute in the Midland area. The districts represented are Birmingham, Leicester, Nottingham and Rugby. It is intended to hold the inaugural meeting early in October, probably in Birmingham.

Further information may be obtained from Dr. J. H. Mitchell, F.Inst.P., the Research Laboratory, The British Thomson-Houston Co., Ltd., Rugby.

Italy Supports Musicians

THE Italian broadcasting organisation, it is stated, has decided to make a considerable reduction in the number of transmissions from discs or other forms of recorded material, the object of this being to stimulate employment of musicians who are at present out of work.

All-wave Wireless

ACCORDING to an estimate of American sales of wireless receivers, 60 per cent. of all the sets sold in 1934 and 80 to 90 per cent. of those sold so far this year were of the all-wave type, and it is estimated that there are at present three million all-wave receivers in use in the United States, out of a total of some twenty million homes equipped with wireless.

Short-wave listening is an established institution.

In the Grandstand

FRENCH amateurs are finding all the excitements of a race in comparing the British and German licence figures. According to our Paris correspondent some anxiety has been caused by the fact that Germany is again "creeping up" on the British figure. One of our French contemporaries exclaims: "Allons, Messieurs les Anglais, un petit effort! Gardez votre priorité"

A New Interval Signal

RADIO COTE D'AZUR is introducing a new musical interval signal, which takes the form of a few bars of a celebrated hymn, and after each transmission this will now be heard, the final transmission closing down with the "Marseillaise."

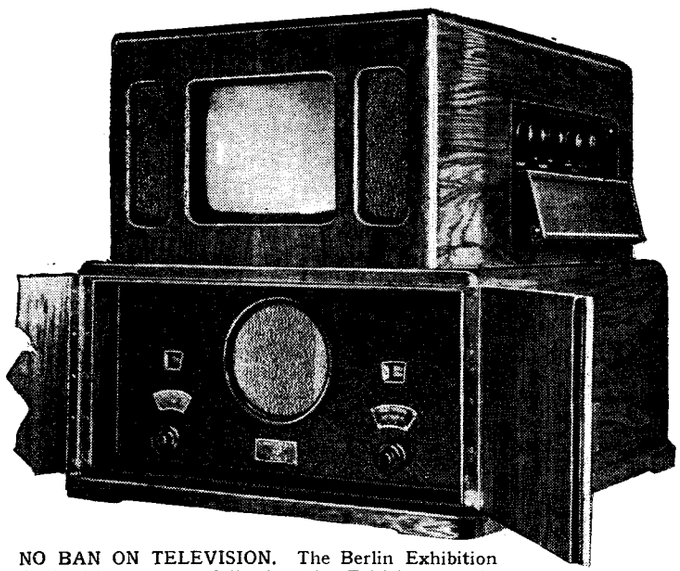

NO BAN ON TELEVISION. The Berlin Exhibition Authorities are not following the British example. There will be television receivers on show at the German exhibition. The picture shows a new set produced by the Fernsch Company. Tuning is pre-set to the wavelengths of the sound and vision transmissions.

"Wireless World" Classified Advertisements

CLASSIFIED advertisements for our issue of August 9th can only be accepted up to first post on Friday, August 2nd, as August Bank Holiday necessitates earlier closing for press.

Scandinavian Radio Dispute

TROUBLE is expected at the coming meeting of Scandinavian radio organisations, at which the Swedish "Radiotjanst" will be criticised for breaking a mutual pledge among the broadcasters not to pay moneys in respect of sporting commentaries. "Radiotjanst" is alleged to have paid for the right to give a running commentary on the Swedish-Danish annual football match.

For Overseas Swiss

SWITZERLAND is to "borrow" the League of Nations short-wave station at Prangins for special programmes intended for Swiss Nationals overseas.

Wireless Noise

A CORRESPONDENT whose letter was published recently in the *Yorkshire Post* makes a pitiful appeal for noise abatement, and wishes that the Anti-noise League could come down his street when all the sets are in full blast while the owners are outside talking and laughing, trying to make themselves heard above the din.

Another listener, writing to a South Wales paper, asks whether it is legally possible to have peace in the countryside now, and complains that a neighbour keeps him "entertained" by means of a loud speaker in his garden all day long. Does this constitute a nuisance?

Transmitters in the Making

WORLD developments in broadcasting are reflected in the great activity now going on at the Marconi works, Chelmsford, where no fewer than ten medium and long-wave broadcasting transmitters are going through the shops and test rooms.

The largest of these is a 220-kilowatt long-wave transmitter for Lahti, Finland. A 20-kilowatt station for Jerusalem is now undergoing final tests, and a 10-kilowatt transmitter has been sent to Rio de Janeiro.

Three small relay transmitters are being sent to Sweden, and two others will go to Cairo and Alexandria.

An Interesting Austrian Receiver

Reflex Circuit Employing a Westector

IT is always instructive to compare the methods of Continental designers with those to which we have become accustomed in this country, and this example of Austrian practice reveals many points of interest and novelty.

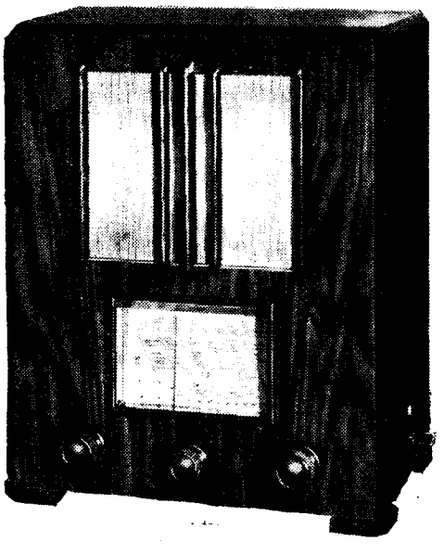

THE "Fidelio" receiver made by Messrs. Kapsch and Soehne A.G., of Vienna, is a three-valve superheterodyne covering short waves from 18 to 55 metres in addition to the usual medium- and long-wave ranges. A Westector is used for second detection and the IF amplifier is reflexed, acting also as a first LF amplifier before the pentode output valve.

The frequency-changer is an octode and is preceded by only a single tuned circuit in the aerial. Nevertheless, the selectivity is found to be quite adequate for local conditions and the medium-wave coil is wound on a closed iron core. The IF transformers, which are tuned to 450 kc/s, are similarly constructed and the comparatively high frequency chosen keeps the medium waveband free from self-generated whistles.

The circuit arrangements for reflexing the IF stage are probably the most interesting features of the set. The type WX6 Westector is fed from the secondary of the output IF transformer and the load resistance R, shunted by the usual by-pass condenser is connected to the IF valve cathode, i.e., slightly positive with respect to earth. HF filtering is provided by R1 to C1, and the LF component is coupled to the volume control by C2 and thence to the grid of the reflex valve by C3 and R3. Additional filtering of HF is provided by R4 and C4, and in order that the cathode return circuit shall have a low impedance to both LF and HF currents a 12 mfd. electrolytic and an 0.1 mfd. non-inductance paper condenser, are connected in parallel across the bias resistance. The DC component of the Westector output is fed to the octode grid for automatic volume control, the reflex valve being "decontrolled" for obvious reasons.

The amplified LF component in the anode circuit of the reflex valve is fed to the output valve through C5, and any remaining trace of HF is filtered by C6 and R6.

Ganged Volume Controls

A volume control R7 in the grid circuit of the output valve is provided in addition to that arranged in the detector circuit, both being driven by a common spindle. Both volume controls follow a logarithmic law, *but in the opposite sense.* The first potentiometer gives the largest variation of resistance for a given angular movement at the "full volume" end in the usual way, but with the control quite "down," there would still be an appreciable amount of LF at the grid of the output valve owing to the high gain of the reflexed valve and the residual curvature of its characteristic which causes partial rectification. The volume control in the output stage is, therefore, arranged so as to give the maximum percentage change of resistance at the "low volume" end, where the first volume control practically ceases to be effective. Volume control could, of course, be effected by a variable condenser in the aerial circuit, but by this method the efficiency of the AVC is greatly impaired. By the arrangement used the AVC is permitted to work over its full range up to the maximum sensitivity of the set at 6-8 microvolts/metre, irrespective of the adjustment of the volume control.

The output from the pentode is shunted by a variable resistance-capacity tone control and the moving coil loud speaker is provided with a hum-bucking coil. A full-wave rectifying valve supplies the HT current which is smoothed by the loud speaker field and a 10-mfd. dry electrolytic condenser.

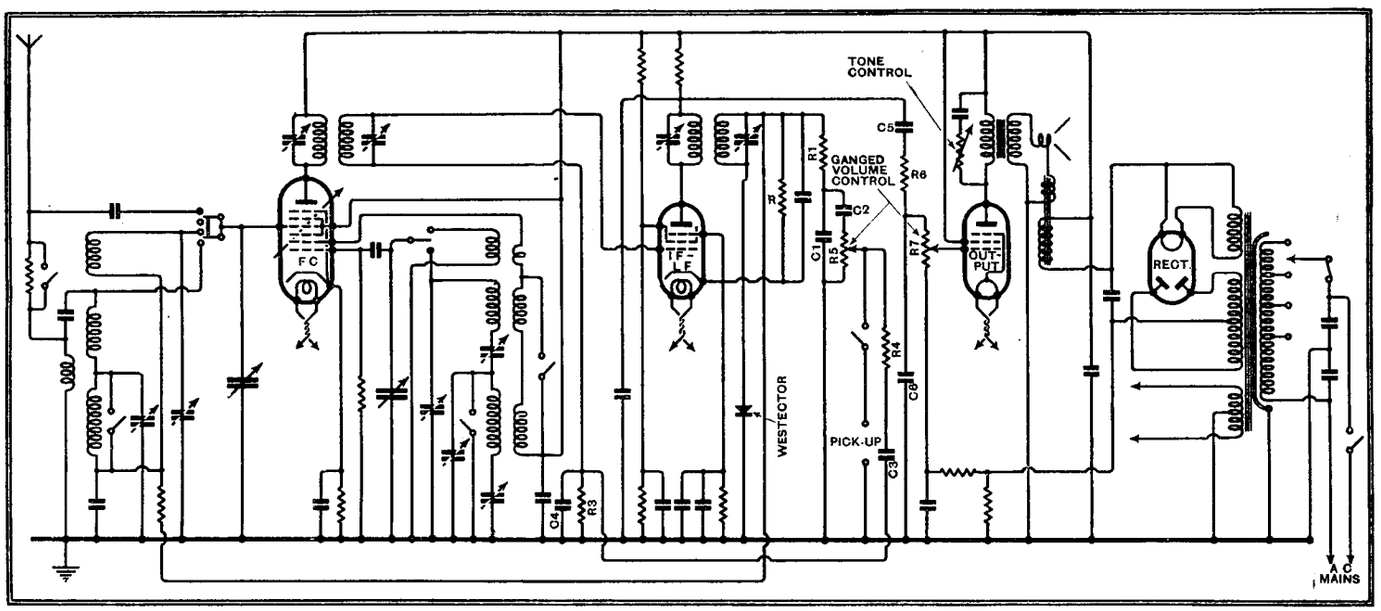

Interesting features of the Austrian "Fidelio" superheterodyne are the reflexing of the IF stage and the use of dual-ganged volume controls.

An Interesting Austrian Receiver—

The mains transformer, according to Continental practice, is tapped for the voltages of 110, 130, 150 and 220 volts, adjustment being made very easily by inserting a screw with an insulated head into the appropriately marked tapping. The transformer primary is protected by a 750 milliamp. fuse and balanced by two 0.01 mfd. condensers in series,

The large rectangular tuning scale is indirectly illuminated and a long vertical pointer traverses the three wave-range scales which are calibrated in wavelengths. The names of the principal short- and long-wave stations are marked horizontally along the appropriate scales, but the medium-wave stations, of which a considerably larger number are given, occupy the centre of the dial and are arranged in six sloping columns to facilitate accurate selection.

Policing the Short-waves

Brussels Checking Station Gets to Work

REALISING the growing importance of short-waves for broadcasting purposes the International Broadcasting Union has commissioned its listening post at Brussels to prepare monthly graphical records showing the results of careful measurement of short-wave broadcasting stations' wavelengths. It will be remembered that the Brussels Checking Post has been officially requested by the European governments to "police" the wavelengths of European medium and long-wave stations.

It is an entirely new departure for the International Checking Post to commence work on the short waves. As they gain experience the number of stations checked at Brussels will, no doubt, augment considerably. The graphical records of the June measurements includes roughly 60 clearly identified stations (33 are European), the range covered being from 13.92 metres to 50.59 metres.

The bands reserved for broadcasting are specially marked, but frequencies of stations working outside these have also been measured. The "graph" shows that the short-wave stations have not yet attained that precision of operation of which most of the medium broadcasting stations can boast.

The table starts with a station on 50.59 metres, Medellin (Colombia) HJ4ABE. HVJ (Vatican City) on 50.3 metres shows certain wavelength variations, but nothing like the Pernambuco Radio Club transmitter which varied between 6010 and 6038 Kc in the course of the month. (49.92 metres and 49.69 metres) Vienna OER2 on 49.4 metres (6,070) also showed a tendency to vary its wave by several kilocycles. Lisbon CSL, normally operating near 48.78 metres, was suddenly discovered on 48.37 metres on June 18th. The Scandinavian station, Jeloy LKJ1, was operating in the neighbourhood of 31.35 metres on June 3rd, but then became quite a steady transmission in the neighbourhood of 31.49 metres. Lisbon CT1AA was measured on 31.27 metres at the beginning of the month, towards the middle on 31.23 metres, and on two days it was discovered operating in the neighbourhood of 25.37 metres.

But apart from these transmitters which, after all, are only smaller ones, the big stations like Daventry GSL, Wayne (NJ) W2XE, Zeesen DJC, Pitzburg W8XK, Bound-Brook (NJ) W3XAL, were perfectly steady transmissions; so also was Moscow RW59 on 24.99 metres.

From the above readers will see that the Brussels Checking Station does not only receive European stations, but a number of more remote stations as well. Short-wave listeners will, no doubt, realise that to measure the frequency of a given station and to identify it by means of its transmission at a distance requires very excellent reception, and it is, no doubt, for that reason that the number of stations recorded this first month is not very great.

The Brussels decision to issue frequency "graphs" of the world's short-wave broadcasting stations measured at a distance seems to be one of the first steps towards a Lucerne plan for the short-waves. This will, no doubt, be discussed at the next telegraphic conference, which is to be held in Cairo.

Recording the results of a month's check on wavelength measurements at the Brussels listening post.

Short-wave Broadcasting

Listening "Round the Clock" to America

I HAVE had further evidence that readers really do switch on their short-wave receivers to listen to individual items. As a matter of fact, that one chance remark a few weeks ago aroused quite a chorus of comment.

One reader has suggested a new pastime which should commend itself to those who can go without sleep for an unlimited period. Briefly, the idea is to see for how many hours the non-stop reception of America is possible. By careful choice of wavelength, and a good knowledge of the stations that are active at certain times, one would imagine that it should be possible to go on for a month or so. The snag, however, is the "dead" period between 8 a.m. and noon, when one has to be very lucky to find a station sufficiently strong to follow perfectly.

The Non-stop Programme

On an ordinary day one can start with W3XAL (16.87 metres) at 2 p.m., changing over to W8XK (19.72 metres) at 3 p.m. W8XK continues until 9.30 p.m., but W2XAD on 19.56 makes a pleasant change between 8 and 9 p.m.

By some feat of magic, W8XK appears to start up on 25.27 metres at the same second at which he closes down on 19.72, and that gives us another 5½ hours, which brings us to 3 a.m. From then onwards, many of the 49-metre stations continue until one is within measurable distance of breakfast, at which time the sensible listener will decide that enough is as good as a feast, and call it a day.

Calibration of short-wave receivers has always been desirable as an aid to the easy identification of stations. Nowadays, however, so many of the short-wave broadcasters are content with working on frequencies somewhere near those published in the official lists that one cannot tell quite what is happening.

Many of the Colombian stations, in particular, seem to exchange call-signs in the best "Hilversum-Huizen" manner, and one never knows whether the station on, say, 49.15 metres really *is* HJ4ABL. It may be HJ3ABH one night and HJ2ABA the next! From our point of view, however, one Colombian station is very much like all the rest, and it is not a very important matter.

What *is* important is that it is quite impossible to rely upon a calibrated receiver and the most accurate of tuning graphs for definite identification of a station that makes no announcements. A further worry is introduced by the growing tendency on the part of short-wave stations to relay each other's programmes in an unofficial, lighthearted way.

A Colombian recently heard was relaying W2XAF for hours without making any announcement whatever; and, in one extreme case, a certain station was heard relaying another which, in turn, was taking its programme from a third!

New stations heard and reported include HH2S, Port-au-Prince, Haiti, on 49.41 metres; XEBT, Mexico City, on 50 metres; CSL, Lisbon, on 48.82; TI-PG, San Jose, Costa Rica, on 45.81; and HJ4ABA, Medellin, Colombia, in the 25-metre band—*not* on his published wavelength of 25.6 m.

The 19-metre band seems to be more "organised" than any of the others, and is about the only broadcast band on which a reliable calibration can be made.

MEGACYCLE.

The "*Universal*" Receiver

Versatile—But Vulnerable at Several Points

By "CATHODE RAY"

WRITERS who use inverted commas freely without justification irritate me. The significance of the above title should therefore not be overlooked. As a form of punctuation inverted commas indicate merely that what lies between them is a quotation. On the generally adopted assumption that what oneself writes or says is correct and what other people write or say is wrong, or at the best dubious, they have come to mark the writer's attitude to the expression enclosed.

No, I do *not* believe that the "universal," or AC/DC receiver justifies its title—if it means that the AC-only type of set is done for. True, it is possible to produce a remarkably good "universal" set, which not only can be plugged into DC supplies or into AC of any frequency without alteration, but can be used on any domestic voltage above 190 without adjustment of tappings.

the smoothing problem is a very nasty one altogther, for in dodging the sort of hum one gets on a particular type of supply mains, one is very likely to run into another sort. It is extraordinarily difficult to guarantee exclusion of modulation hum in all situations and conditions. Mains-borne interference is more liable to gain an unwelcome hearing.

Transformer Makes for Safety

And then there is the question of safety—or absence of it. Apart from anything else, the power transformer in the AC receiver justifies its existence on this score. It helps in two ways. It sets a limit to the amount of power the mains can pour into any fault that develops on the receiver side. Even a dead "short" cannot cause such a big splash as the uninterrupted flow from the mains direct.

And it enables touchable parts of the

chassis as a whole should be accessible only after removal of a back cover which necessitates prior removal of the mains plug. The chassis fixing bolts must be covered up. The grub screws securing the control knobs must be sealed up with wax. The metal escutcheon plate, if any, must be insulated and preferably earthed. The aerial and earth connections must be isolated by an inductive coupling.

There are receivers actually offered to the public with external loud speaker terminals or sockets connected straight to the output valve. Some "designers" are clever enough to avoid this crime, but think all is well if they provide a choke-coupled output, the loud speaker being joined through a condenser. If the condenser is large enough (as it should be) to pass a 50-cycle note to the loud speaker with negligible reduction, it is also capable of administering a healthy 50-cycle shock.

The same applies to gramophone pick-up terminals. Direct connection is too obvious a blunder. But it is not always realised that the large condensers that are necessary for bass response are nearly as good a shock conveyer as a direct connection. None of these connections—earth,

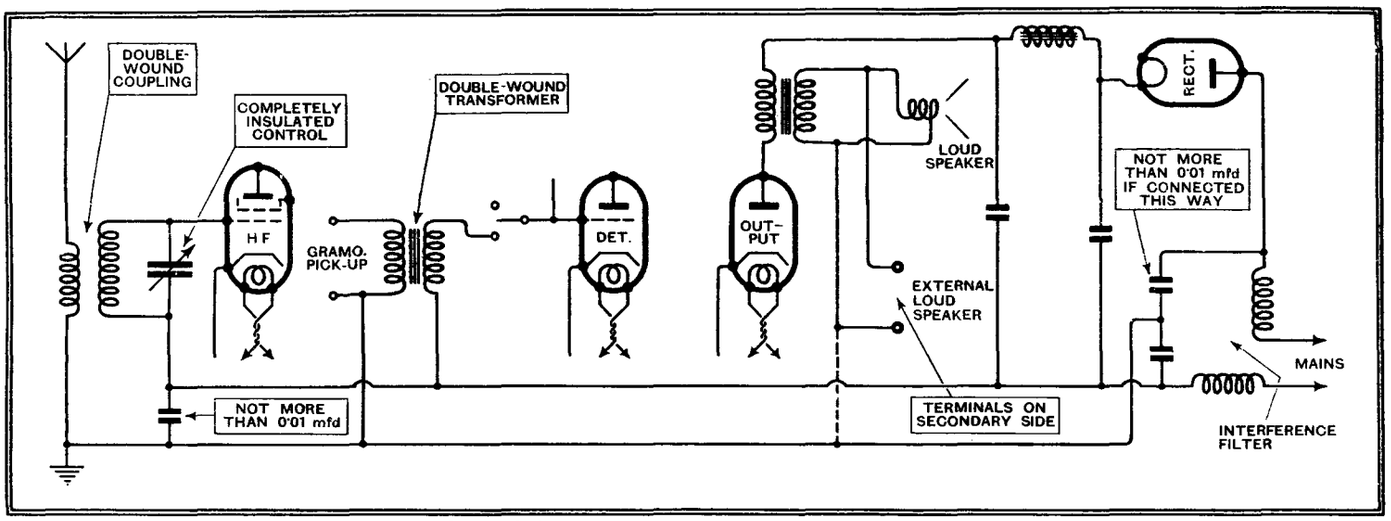

Some of the points to watch in an AC—DC receiver.

Against this seemingly decisive advantage over the exclusively AC type, which needs voltage adjustment and does not cover both 25-cycle and higher frequencies in one model, is an array of disadvantages. Other things being equal, the parallel valves of the AC set are more reliable and live longer than the series valves of the "universal." Valve makers are less happy about the latter; and particularly about the rectifier, which leads a veritable dog's life. While the undesirable voltages are thus higher, the beneficent voltages that provide efficient operation are lower. The loud speaker magnetising coil is unable to serve a useful purpose as a smoothing choke and is merely an extra drain on the smoothed supply. In fact,

set to be kept safe. It is almost always found necessary, or at least desirable, to connect the chassis and metal work generally of any set to the common negative line of the circuit, and it is customary for all this to be earthed and thereby made safe to touch. To follow this custom in a "universal" set, where the circuit parts are bound to be in direct connection with the mains, is to risk level odds that DC mains will be dead shorted, or almost a certainty that AC mains will be shorted, and in any case to contravene the electric supply company's regulations. If the chassis is not earthed, it runs the same odds of being fully live.

The only safe thing to do is to make all the possibly live parts inaccessible. The

aerial, speaker, pick-up—should be made through condensers larger than 0.01μF. Which means that the best plan is almost always transformer coupling. Another thing to think out carefully is an interference suppressor; the usual 0.1 condensers or larger may cause sparks to fly.

Experiments are quite used to getting shocks from the mains. But there are several points to remember. One is that young children or people in poor health may not come off so well. Another is that in certain circumstances—such as moisture and firm contact—even a robust person may be electrocuted by a couple of hundred volts. Yet another is that a shock harmless in itself may knock one's hand against a sharp edge.

This Empire Broadcasting

Praise and Criticism from Singapore

WRITING from Singapore, our contributor discusses good and bad aspects of the present Empire broadcasting system from the standpoint of the man for whom the transmissions are intended. He praises the B.B.C.'s technical achievement but condemns its programme policy; discusses the typical British short-wave receiver and deplores its shortcomings in the face of American competition; and, finally, gives some personal reflections on what a "Tropical Specification" should include.

By "HEPTODE"

IT is difficult even for the most enthusiastic of short-wave listeners at home to realise the great progress that has been made in short-wave broadcasting during the last two years.

There are probably no short-wave broadcasting stations anywhere in the world of any considerable power which radiate transmissions specially intended for reception in the British Isles. Even the short-wave relays of American stations are mainly concerned with putting out their commercial advertising to the more remote parts of the American continent, and their transmissions take place during the working hours of their medium-wave stations.

How different is the case of the Empire listener in the overseas Dominions and Colonies! His aerial is the target for the high-powered, directional short-wave transmissions sent out by the broadcasting authorities of half a dozen European countries. Wavelengths, aerials and times of transmission are adjusted throughout the twenty-four hours to ensure reception during the evening hours in successive zones around the world. The seasonal effects which trouble the home listener who tunes-in American stations are eliminated for the Empire listener by the adjustments made at the sending end for his benefit.

As a result of these efforts on his behalf the Empire listener is able to obtain remarkably reliable reception of a good selection of European programmes. The B.B.C. zone system for supplying programmes at suitable hours to different parts of the Empire and the use of more than one wavelength simultaneously transmitting the programme has become the model for most of the European broadcasters. The B.B.C. always use two wavelengths; Berlin normally uses three. The B.B.C. plans for expansion of the Empire Service provide for three wavelengths to be used.

A year's listening in Singapore has shown that the B.B.C. transmissions are by far the most consistent in strength. There are periods of the year when this or that foreign station is received at greater strength than the B.B.C. transmissions, but it is always a passing phase, and soon the B.B.C. stations are the best received again. There is no doubt that the B.B.C. engineers are well ahead of all others in the development of short-wave broadcasting. Nor do they seem disposed to rest on their laurels, for tests are constantly being made upon which listeners are asked to report. The B.B.C. Empire Service is an undoubted success from the technical point of view.

The B.B.C. engineers are well ahead of all others in the development of short-wave broadcasting. Nor do they seem disposed to rest on their laurels. Above is a sunset view of one of the Empire "arrays" at Daventry.

Foreign Competitors

Foreign countries have not been slow to realise the propaganda value of this truly international form of broadcasting, and their short-wave stations all originate programme material in foreign languages. So universal has become the tongue of the British Empire and U.S.A. that English is largely employed. News bulletins in English are given by all the European short-wave stations, and most of them are, to put it mildly, inspired. The Empire Service must reach a far greater English-speaking foreign audience than can be reached by the medium-wave transmitters at home. This aspect of Empire broadcasting should be considered by those critics who complain that money from Home licence fees should not be expended for the benefit of the Empire listeners. Even *The Times* suggested in a recent leading article that the service should be "placed on a less unilateral financial basis." If other countries find it worth their while to broadcast to the British Empire on short waves, surely it is up to Great Britain to provide a service without Empire financial assistance. Even if the service were to be financed from British general revenue and not from the B.B.C. funds the British listeners would still be paying for it.

Broadcasts of events of national importance, the news bulletins and items from the normal B.B.C. programmes are very much appreciated overseas, but with few exceptions the special programme material compiled for the Empire Service is of a low standard and unworthy of British broadcasting. People who have been in England in recent years and know the high standard of the B.B.C. pro-

This Empire Broadcasting—

grammes are amazed at the mediocre material which is considered sufficiently representative of Britain to be broadcast internationally.

While recording offers a means of distributing the main B.B.C. programmes at times to suit the zones of the Empire Service it is objected to by many listeners. These objections are based slightly on technical, but mainly on psychological, grounds; and the B.B.C., respecting the wishes of the bulk of their overseas listeners, try to provide as much "live" programme material as possible. In order to do this an Empire Programmes Staff is maintained, with a director and producers. It is clear from listening to the special Empire items that the funds available for this department must be very limited. Payment in the entertainment world is based upon ability to entertain, so that most of the efforts of the Empire Programme Department are valiant attempts to make bricks without straw.

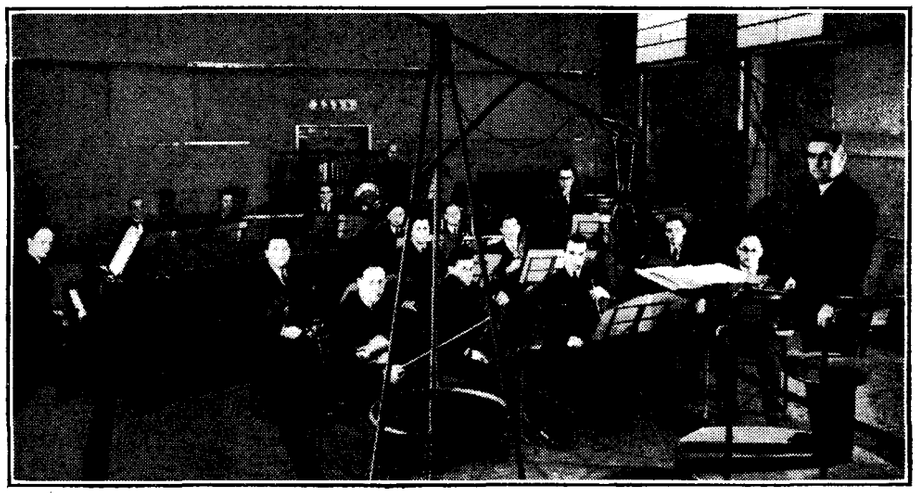

Most of the efforts of the Empire Programme Department are valiant attempts to make bricks without straw. Our contributor would make an exception in the case of the B.B.C. Empire Orchestra, the very effective combination seen above. Eric Fogg is the conductor.

"Live" v. Recorded Programmes

If it were necessary to put up with a lower standard of programme in order to get "live," and not recorded, programmes, there would be perhaps small grounds for complaint whilst finances are limited. But this is not the case. These special items produced by the Empire Programme Department are only radiated "live" in one of the six daily periods of transmission, and then *recorded* for subsequent use in the other five periods. As a result of this, the gain in hours of "live" programme transmission is very small. If recordings have to be broadcast why should they not be made from the best items of the normal B.B.C. programmes? There are often excellent items from the home programmes which are put out in transmission IV because it happens to coincide in time with evening in England. Recordings of these items would be better material for the other periods of Empire transmission than recording of the strawless bricks of the Empire Programme Department itself. For many years the Empire car market was in American hands. British manufacturers failed to study the requirements of the overseas consumer and gave him what they thought he ought to want. Recent expansion in British car exports is due in no small measure to a change in this attitude on the part of our manufacturers. The state of the Empire market for short-wave receivers is very similar to that of the overseas car market some years ago. American short-wave and all-wave receivers, by reason of their excellent performance and low price, dominate this market. Despite much advertising, in which exaggerated claims are often made, British sets have a very small sale because they cannot bear comparison in performance with the American sets using from eight to twenty valves. It is time our manufacturers began to make sets suitable for this growing market, and ceased to rely on misleading advertisements, preferential tariffs and patriotic buyers to dispose of sets of out-of-date design.

The car manufacturers had an excuse in the horse-power tax for their tardy realisation of the possibilities of the overseas market. Perhaps the higher price of British valves may be suggested as an excuse for the radio manufacturers, but there is an important difference between these two cases. The horse-power tax was a matter over which the car manufacturers had no control, but the radio set manufacturers are also valve manufacturers, and the remedy would appear to be in their own hands.

A short-wave broadcast receiver must have a performance comparable with that of a high-class medium-wave receiver, and it must be just as easy to operate. Very good results can be obtained by the use of a well-designed short-wave converter in conjunction with an up-to-date medium-wave receiver, but the listener who depends on short waves for all his reception does not want the extra apparatus. The most popular set is undoubtedly the all-wave receiver.

The most essential feature of a short wave broadcast receiver is that it should possess adequate amplification. Equally important is it that really effective AVC should be provided to counteract the fading which is always present. The use of a delay voltage for AVC is a compromise which can well be avoided in short-wave sets provided sufficient amplification is available, and some of the latest American sets use a single diode for both second detector and AVC rectifier. QAVC is useless for short-wave work, for any signal is liable to fade below the level necessary to operate the muting device and the programme becomes punctuated with short periods of silence. If the operating voltage is adjusted to overcome this trouble the object of the QAVC circuit is defeated. In an all-wave receiver fitted for QAVC on medium waves, provision should always be made for switching out the "Q" part of the circuit for short-wave reception.

Selectivity and Calibration

Selectivity is even more important when listening on short waves overseas than it is for medium-wave reception in Europe. The short-wave broadcasting bands are becoming more and more crowded and morse stations encroach right up to the limits of the broadcasting bands and even stray into them from time to time. Selectivity requirements are now beyond any type of receiver except a superheterodyne, and there are many snags awaiting the designer of short-wave superheterodynes. It is very important that two-position tuning should be avoided, for this can occur even with ganged tuning circuits on short waves unless precautions are taken to avoid it. Single-position tuning is secured in American sets by using so high an intermediate frequency that when the oscillator condenser is set to the position which would give a second point of reception, the signal frequency tuning circuit is sufficiently out of tune to prevent any signal energy reaching the grid of the first detector. Even then strong signals break through and a stage of signal frequency amplification is fitted in their latest sets as a complete cure for this defect.

Most British short-wave superheterodynes have two-point tuning because the low intermediate frequencies of medium wave practice are used for short waves. One such set has a dial which is calibrated in wavelengths for one tuning point; the other point is completely ignored even to the extent of there being no mention of it in a voluminous book of instructions. This method of elimination of two-point tuning is not likely to appeal to the purchaser! Another British manufacturer of high repute urges, in the instructions issued with a short-wave Kit set, that two-point tuning is an advantage because interference present on one tuning point can often be avoided on the other, quite overlooking that such interference is caused by the two-point tuning!

British designers must disabuse themselves of the idea that in an all-wave set listeners will accept a standard of perform-

This Empire Broadcasting—

ance on short waves inferior to that on medium waves. Too often an excellent circuit for medium waves is modified to a most inferior arrangement when switched over to short waves. This may suit the Home listener who wishes to supplement his medium wave reception with an occasional excursion into the short waves, but it is useless for the overseas listener who depends on short waves for his only entertainment.

A very large number of overseas listeners live in tropical or sub-tropical countries, and sets should be designed with their requirements in view. Sensitivity on the wave bands below 20 metres is of great importance in the tropics, for it is down there that the worst of atmospherics cease to trouble the listener to short wave broadcasting. Yet it is a fact that British receivers are both less sensitive and more difficult to tune on these wave bands than are their American rivals. "Tropical Specification" must not stop at the provision of solid wood cabinets in place of ply wood. The electrical specification must be "tropical" as well. Rubber covered connecting wire must be used in place of insulated sleeving of the bakelised type, which deteriorates rapidly in a hot moist climate and has actually been known to become a sufficiently good conductor to enable a filament to light through it. In diode and AVC circuits where high resistances are used the greatest care should be taken to use condensers and other components which will not allow leakage under tropical conditions. Fine windings in HF chokes and in LF transformers are very prone to break down due to damp causing corrosion in the tropics, winding should be of heavy gauge or well impregnated.

It is curious to note that a slightly overloaded mains transformer can be used to advantage in the tropics in that its heat keeps the set dry.

Short-wave broadcasting has a great future as a medium of Empire and international intercourse. The B.B.C. engineers have placed Britain in the forefront of the development of transmission technique. The B.B.C. Empire Programme Department must reconsider their present policy with a view to giving the Empire the best possible entertainment and to securing for Britain the largest proportion of the world radio audience. Finally, the British manufacturers must produce efficient sets at a reasonable price which will be worthy of the excellent technical service provided by the B.B.C. They should remember that the market for such sets is not limited to the boundaries of the British Empire.

Radio Data Charts—VII.

The Design of Iron-cored Chokes and Transformers Carrying AC Only

By R. T. BEATTY, M.A., B.E., D.Sc.

IRON-CORED chokes and transformers are used in inter-valve stages to carry on the LF signals, and by use of a circuit such as is shown in Fig. 1, in which a large capacity C is placed in series with the choke L, the choke can be made to carry AC only and is thus freed from the complications which ensue when DC is superposed upon the AC signal It is

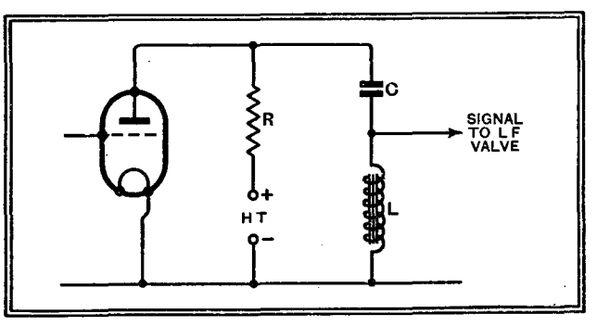

Fig. 1.—Simple intervalve coupling in which separate paths are provided for the DC and the LF signal currents.

desirable to arrange for this parallel feed type of circuit when possible, since the effect of DC is to diminish the inductance of the choke for AC signals, because the tiny magnets of which the iron is composed are forced to lie head to tail in parallel chains when DC flows, and accordingly are constrained and less free to vibrate in response to the AC signal.

Since the purpose of the choke is to deliver an AC audio signal to the following valve it is essential that the reactance of the choke at the lowest audio frequency should be three or four times as great as the AC resistance of the valve in Fig. 1. This condition ensures that a reasonably large signal is developed between the terminals of the choke, and accordingly the problem of design is chiefly concerned with the production of a sufficiently large self-inductance.

It should be noted that the problem of designing a choke or transformer to be used in conjunction with a valve is essentially different from the problem of designing a mains transformer. A mains transformer is a current transformer with its primary directly connected to the source of supply, and the main consideration is one of efficiency; we are concerned with copper and iron losses, but inductance does not enter explicitly in the design. A stage transformer, however, is either a voltage transformer working on small signals, in which case losses are negligible, or a current transformer when used in the output stage, in which case losses are of secondary importance, since it is essential to work at low flux density to avoid the generation of harmonics. In both cases the AC resistance of a valve is in series with the primary, and signal strength can only be maintained by making the inductance of the primary large enough to swamp the valve resistance.

The Design of Chokes

In any choke which is working at a prescribed flux density the inductance is proportional to the volume of iron in the core and also to the square of the turns of wire per unit length of iron path. The winding, as a rule, does not extend along the

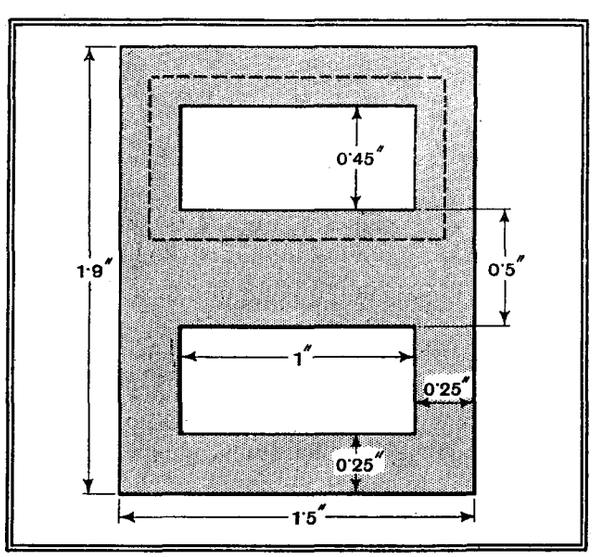

Fig. 2.—Dimensions of Stalloy stampings referred to in the text where an example of the method of using the chart is given.

Radio Data Charts—VII.—

whole of the iron circuit but is limited to the middle leg of the core, and we do not mean the actual turns per unit length of the winding itself, but the total turns divided by the mean length of the magnetic path.

Accordingly, it is convenient to use the quantity L/n^2V, where

L = inductance,
n = total turns/length of iron path (turns per unit length),
V = volume of iron.

If we build a number of chokes of different shapes and sizes, using the same kind of core material in each case, and working at the same r.m.s. flux density, then L/n^2V will have the same value for all these chokes. The value of L/n^2V depends only on the permeability of the iron at the flux density employed. In c.g.s. units we have

$$L/n^2V \times 10^8 = 4\pi\mu/10 = 1.256\mu,$$

where L = inductance in henrys,
n = turns per cm.,
V = volume of iron in cubic cms.,
μ = a.c. permeability,

RADIO DATA CHART FOR DESIGNING LF TRANSFORMERS AND CHOKES

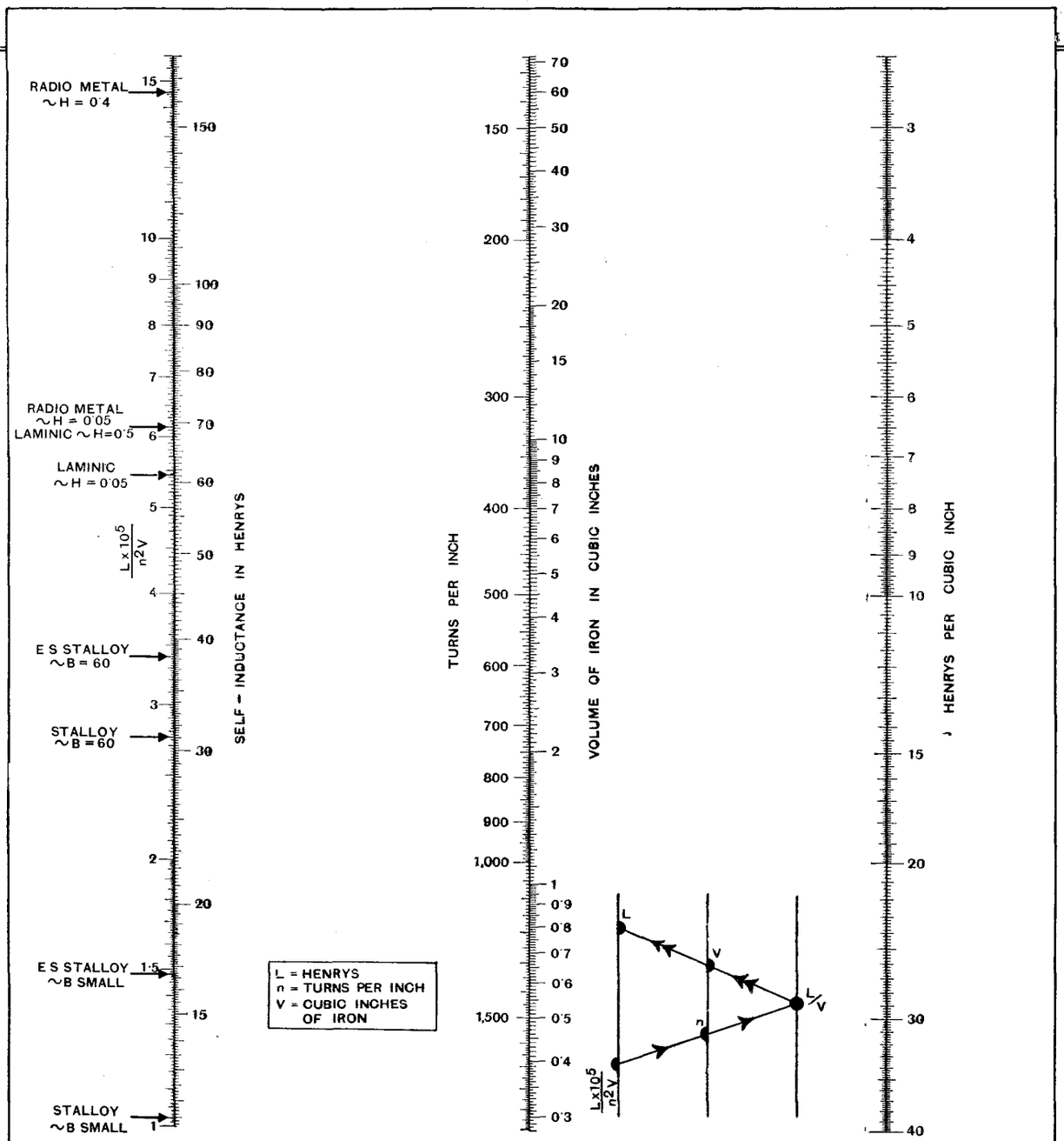

THE DESIGN OF IRON-CORED CHOKES AND TRANSFORMERS CARRYING A C ONLY

The Wireless World COPYRIGHT

Radio Data Charts—VII.—

while in British units

$$L/n^2V \times 10^8 = 4\pi \times 2.54\mu/10 = 3.193\mu.$$

where L = inductance in henrys,
n = turns per inch,
V = volume of iron in cubic inches,
μ = a.c. permeability.

The following table gives data taken from figures supplied by manufacturers of magnetic materials and expressed in British units.

All Tests at 50~		$\frac{L}{n^2V} \times 10^5$
Stalloy	~B small	1.022
Stalloy	~B = 60	2.76
Extra Special Stalloy	~B small	1.48
Extra Special Stalloy	~B = 60	3.40
Radiometal	~H = 0.05	6.15
Radiometal	~H = 0.4	14.56
Laminic	~H = 0.05	5.43
Laminic	~H = 0.5	6.15

In the above table ~B = 60 means that the root mean square value of the alternating flux density is 60 gauss (lines/cm²), while ~H = 0.5 means that the r.m.s. alternating magnetic force is 0.5 gauss (or in modern terms, oersteds or gilberts/cm.).

Some Explanatory Notes

The above table refers to tests made at 50 cycles per second; at higher frequencies L decreases, so that the reactance $2\pi fL$ is the product of two terms, one of which (f) is increasing while the other (L) is decreasing. But in all materials f rises more rapidly than L falls, so that the reactance, if calculated for 50 c.p.s., will take care of itself at higher audio frequencies.

For each material two values of ~B or ~H are given. The smaller value should be used in design, since if the inductance is sufficiently large for a small signal its increase for a large signal will have a negligible effect in increasing transmission efficiency and accordingly amplitude distortion will be small. The above remark is always true for interstage chokes and transformers, but in a powerful output stage with a 25-watt valve the minimum signal catered for is so great that the larger value of ~B or ~H may be chosen, thus allowing a considerable saving in magnetic material.

Chokes and transformers in which no DC flows and in which the magnetic core is a continuous circuit without gap are used in inter-valve stages with parallel feed, as in Fig. 1, and also in balanced output circuits, such as push-pull, where the DC flows in two separate coils arranged so that no steady magnetic flux is generated. Mains transformers are also in this class, but the method of design is different and they have been treated elsewhere.*

Examples

1.—Stalloy stampings of the dimensions shown in Fig. 2 are available, together with a reel of No. 30 S.W.G. enamelled copper wire. If the stampings are assembled to a thickness of 2.5in. what is the inductance of the choke when fully wound?

From winding tables the turns per sq. in. = 5,370.
Area of window = 0.45 sq. in.
∴ Turns = 5,370 × 0.45 = 2,420.
Length of mean magnetic path (dotted in Fig. 2) = 3.9 in.
∴ Turns/inch (theoretical) = 2,420/3.9 = 620. Allow 10 per cent. for packing space, former, etc.
∴ Turns/inch (actual) = n = 620 × 0.9 = 558.
Area of one stamping = 1.95 sq. in. Thickness of core = 2.5in.
∴ Volume of iron (allowing 10 per cent. for insulation thickness) = 1.95 × 2.5 × 0.9 = 4.39 cub. in. = V.
For Stalloy at low excitation (see table).

$$L/n^2V \times 10^5 = 1.022$$
and n = 558,
V = 4.39.

Hence, from Chart L = 14 henrys.

2.—If the core is replaced by one of the same dimensions made of Radiometal, what is the inductance?

$$\frac{L}{n^2V} \times 10^5 = 6.15 \text{ (from table)},$$
$$\left.\begin{matrix} n = 558 \\ v = 4.39 \end{matrix}\right\} \text{as before).}$$

Hence, from Chart L = 84.5 henrys.

* Radio Data Charts. Chart No. 24.

The *Wireless World* 1936 MONODIAL AC SUPER

(See pages 74–78)

LIST OF PARTS REQUIRED

After the particular make of component used in the original model, suitable alternative products are given in some instances.

RECEIVER UNIT

1 Three-gang condenser, 0.0005 mfd., **C3, C7, C13** — **Polar "Minor"** (J.B., Utility)
1 Tuning dial assembly and drive — **Formo "Snail"** (Polar)
3 Variable-selectivity IF transformers, 465 kc/s — **Wearite WW/IFT**
1 Aerial coil — **Bulgin C6**
1 HF transformer — **Bulgin C7**
1 Oscillator coil, 465 kc/s — **Bulgin C59**
4 Valve holders, 7-pin — **Clix Chassis Mounting Type**
1 Valve holder, 5-pin — **Clix Chassis Mounting Standard Type**
1 Valve holder, 9-pin — **Clix Chassis Mounting Standard Type** (Belling-Lee)
1 6-way Connector — **Bryce**
1 5-way Cable with twin 70/36 leads — **Harbros** (Goltone)
1 5-pin Plug — **Bulgin P3** (British Radio Gramophone Co.)
1 Neon tuning indicator, 4-pin base — **Cossor 3184**
1 Holder for above — **Bulgin VH25**
4 Ebonite shrouded terminals, A, E, Pick-up (2) — **Belling-Lee "B"**
1 Screened valve connector — **Bulgin P64**
1 Screened valve connector — **Bulgin P65**
1 Screw-on valve adaptor — **Bulgin P68**
5 SPST switches, S1, S2, S3, S4, S7 — **Bulgin S80B**
2 SPDT switches (S5, S6), S8 — **Bulgin S81B**
2 Lengths of rod, 9in. and 11in., for above — **Bulgin**
2 Knobs — **Bulgin K14B**
2 Knobs — **Bulgin K16B**
2 Reducing sleeves for above — **Bulgin**
1 Tapered volume control, 1 megohm, **R18** — **Reliance GLT** (Ferranti, Claude Lyons, Magnum, Rothermel)
1 Potentiometer, 10,000 ohms, **R23** — **Haynes Radio**
1 Potentiometer, 50 ohms, **R27** — **Kabi Hum Balancer** (Kabi, Watmel)

Fixed condensers
2 0.0001 mfd. tubular, **C25, C26** — **T.C.C. 300**
1 0.015 mfd. tubular, **C22** — **T.C.C. 300**
11 0.1 mfd. tubular, **C2, C4, C5, C6, C8, C18, C19, C20, C21, C24, C27** — **T.C.C. 250**
1 0.0001 mfd., **C9** — **T.C.C. "M"**
3 0.0002 mfd., **C1, C17, C23** — **T.C.C. "M"**
2 0.0005 mfd., **C11, C16** — **T.C.C. "M"**
2 50 mfds. 12 volts, electrolytic, **C28, C31** — **T.C.C. "AT"**
1 2 mfds. 200 volts, electrolytic, **C29** — **T.C.C. "AT"**
1 8 mfds. 460 volts peak, electrolytic, **C30** — **T.C.C. 802**
(Dubilier, Ferranti, Graham Farish, Peak, Polar-N.S.F., T.M.C.Hydra)

Resistances, 1 watt
1 100 ohms, **R28** — **Dubilier**
1 500 ohms, **R11** — **Dubilier**
3 2,000 ohms, **R4, R7, R21** — **Dubilier**
1 8,000 ohms, **R10** — **Dubilier**
3 10,000 ohms, **R2, R9, R17** — **Dubilier**
2 20,000 ohms, **R1, R3** — **Dubilier**
2 30,000 ohms, **R6, R22** — **Dubilier**
4 50,000 ohms, **R5, R16, R19, R20** — **Dubilier**
1 100,000 ohms, **R8** — **Dubilier**
1 250,000 ohms, **R15** — **Dubilier**
1 1 megohm, **R13** — **Dubilier**
2 2 megohms, **R12, R14** — **Dubilier**

Resistances, 2 watts
1 2,500 ohms, **R25** — **Dubilier**
1 7,000 ohms, **R26** — **Dubilier**

Resistances, 3 watts
1 7,600 ohms, **R24** — **Dubilier** (Amplion, Bryce, Erie, Ferranti, Graham Farish, Claude Lyons, Polar-N.S.F., Watmel)

2 Hammarlund double trimmers, C10, C12, C14, C15 — **Rothermel STD220**
3 Stand-off insulators — **Bulgin SW45**
2oz. No. 16, 2oz. No. 20 tinned copper wire, 12 lengths Systoflex, etc.
5 Lengths screened sleeving — **Harbros**
Metal chassis complete with screws, nuts and washers — **C.A.C.**
Valves: 2 VMP4G, 1 X41, 1 WD40, 1 MHD4, 1 ML4 — **Osram** (Marconi)

POWER UNIT

1 Valve holder, 7-pin — **Clix Chassis Mounting Type**
3 Valve holders, 5-pin — **Clix Chassis Mounting Standard Type** (Belling-Lee)
1 5-pin Plug — **Bulgin P3** (British Radio Gramophone Co.)
1 Mains transformer with screened primary — **Challis** Primary; 200/250 volts, 50 cycles. Secondaries; 350-0-350 volts 120 mA., 4 volts 2.5 amp. C.T., 4 volts 6/7 amp. C.T., 4 volts 2 amp. C.T. (B.S.R., British Radio Gramophone Co., Bryce, Heayberd, Claude Lyons, Parmeko, R.I., Rich and Bundy, Sound Sales, Varley, Vortexion, Wearite)
1 Smoothing choke — **Davenset 106** (Alternatives same as Mains Transformer above)

Fixed condensers
1 0.1 mfd. tubular, **C32** — **T.C.C. 250**
1 50 mfds. 50 volts, electrolytic, **C33** — **5 T.C.C. 521**
1 4 mfds. 460 volts peak, electrolytic, **C36** — **T.C.C. 802**
2 8 mfds. 460 volts peak, electrolytic, **C34, C35** — **T.C.C. 802**
(Dubilier, Ferranti, Graham Farish, Peak, Polar-N.S.F., T.M.C.Hydra)

Resistances, 1 watt
2 100 ohms, **R29, R31** — **Dubilier**
1 100,000 ohms, **R30** — **Dubilier**
(Amplion, Bryce, Erie, Ferranti, Graham Farish, Claude Lyons, Polar-N.S.F., Watmel)

2oz. No. 16, 2oz. No. 20 tinned copper wire, 6 lengths Systoflex, etc.
Metal chassis complete with screws, nuts and washers — **C.A.C.**
Loud speaker, 1,250 ohms field resistance and transformer for N41 valve — **W.B. Type EM/W**
Valves: 1 N41, 1 MU14 — **Osram** (Marconi)

UNBIASED

Bird Takes the Blame

HOW often youthful human nature deliberately turns knowledge gained to base uses! A recent instance of this sort of thing has been brought to my notice in which a misguided youth, after sucking dry the brains of the "W.W." Information Department concerning flux density, ampere turns, and other things necessary to the construction of a loud-speaker field magnet, has used the knowledge thus gained for a sinister purpose.

According to a letter I have received from his sorrowing mother, he has constructed an electro-magnet of prodigious dimensions and great weight-lifting capabilities. She would, she states, be justified in her complaints, even if the only offence were the taking of a considerable quantity of mains juice to operate it, but this is not all.

Ostracised ostrich.

He has suspended the magnet amid the thick foliage of a tree which overhangs the footway, and the wires feeding it with current come down the hollow trunk and under the surface of a flower bed and so into the house and up to his bedroom, where he sits, switch in hand, on watch behind a partially drawn curtain.

An ostrich's egg of mellow vintage is supported in an iron wire loop, which is, in its turn, held by the magnet. When any luckless user of the footway comes along, the watching youth immediately cuts off the supply of current to the magnet, and the result is, of course, obvious. The iron loop, like the high-diver's bicycle at the seaside, is, of course, held by a check-string, although in any case it would pass unnoticed in the offensive débris of the over-ripe ostrich's egg.

It is true that such a thing would have been possible, and, indeed, probably was done, in pre-electrical days, by means of a controlling string passing to the bedroom window, but the youthful perpetrators of those days were at least prepared to take their due punishment, as, of course, the evidence of the controlling string would be inescapable. This product of our modern education methods, however, prefers to hide behind concealed electric wires and leave an unfortunate bird to take the blame and be the innocent target for irate letters to the local Press on the remissness of local councils in not ruthlessly weeding out all birds' nests from overhanging trees.

Circumstantial Evidence

IT has often been alleged that epidemics of influenza and other diseases are deliberately started by vendors of patent medicines, and by unscrupulous members of the medical profession, for their own sordid ends.

Something similar, I am sorry to see, has been alleged against radio dealers, or, at least, I would hasten to add, against certain black sheep amongst them, for nobody is more conscious than myself of the high moral plane occupied by the average radio dealer—almost as high, in fact, as that of the manufacturer. *De quibus nil nisi bonum.*

The allegation which has been brought to my notice is that troubles from man-made static have increased a hundredfold since the appearance on the market of the first interference suppressor. I do not mean to insinuate, of course, that these suppressors are ineffective, for the reverse is the case, but the need for them has been observed to increase simultaneously with the supply.

In one particular instance a correspondent has written to inform me that loud and persistent interference commenced on the same day that the local wireless dealer up the road had filled his window with a large consignment of anti-static devices which he had picked up cheap at an auction sale;

I make no further comment.

the trouble ceased on the same day that the last consignment of them were sold. The dealer in question, when approached on the matter, made the rather obvious point that the reason for the cessation of the noise was the effectiveness of the devices he had sold. Unfortunately, however, for him, the abrupt termination of the interference was observed just as much by those who had not fitted suppressors as by those who *had* done so.

In another case it was observed that interference ceased mysteriously whenever chamber music was being broadcast, and an investigation revealed the curious fact that the local dealer was an unfortunate chamber music addict, being a complete slave to the pernicious habit of listening to it.

By FREE GRID

Much as I dislike circumstantial evidence, I cannot help bearing in mind what a learned judge said about the correct inference to be drawn when several things all point in the same direction. I will, however, make no further comment upon the matter but leave the whole question to you, as the jury, to decide.

Llanfairpwllgwyngyllgogerychwyrndrobwllllandisiliogogogoch Outdone

I HAVE often chidden the B.B.C. for their slovenliness in dealing with the names of foreign towns, and readers may remember that some time ago I was publicly thanked by a native of Szczebrzeszyn for drawing attention to the lamentable mispronunciation of a B.B.C. announcer when dealing with this old-world city in the News Bulletin.

This being so, it is with shame and consternation that I find that I myself have been guilty of an even more gross form of slovenliness in dealing with the name of a foreign town. According to an indignant letter which I have just received from South America it appears that some time ago I referred in these columns to "the short wave transmissions from B.A."

I am pleased to learn, however, that I am not alone in my trouble, for my correspondent goes on to complain that the officials of the B.B.C. are equally guilty, since they invariably refer to this great city as Buenos Aires. "I and my fellow citizens would esteem it a very great favour," concludes my correspondent, "if you and the B.B.C. could see your way clear to give this city its full and proper appellation of Ciudad de la Santissima Trinidad y Puerto de Nuesta Señora de Buenos Aires, instead of the undignified abbreviations which you have hitherto adopted."

Will B.B.C. announcers therefore please make a note of this and put in an application for the necessary overtime. I wonder, by the way, what can be the full name of the town for which both the B.B.C. and myself are guilty of using the abbreviation Llanfairpwllgwyngyllgogerychwyrndrobwllllandisiliogogogoch?

Listeners' Guide for the W

Many figures of history are easily recognisable in this scene from the revue "1066 and All That." Relays of this most amusing farce from the Strand Theatre are to be given in the Regional programme to-night.

MEMORABLE HISTORY.

THOSE whose history has become a little rusty will welcome an opportunity of polishing it up by listening to the excerpts from "1066 and All That," to be relayed Regionally from the Strand Theatre to-night (Friday). At 10.10 listeners will hear Act II, which includes the music that accompanies the exit of Queen Elizabeth; afterwards follows the police court scene in which Columbus stands trial on the charge of discovering America and Guy Fawkes on that of failing to blow up the Houses of Parliament.

At 10.45, after a short interval, the second relay, Act III, introduces the inseparable royal couple, "Williamanmary," and, finally, the Napoleonic war episode in which we shall hear Nelson, Wellington, and Napoleon singing a diverting song demonstrating the difference in their postures and the similarity (with a difference) in their hats.

The compère will be Naunton Wayne.

SPORTS COMMENTARIES.

THE sportsman is well catered for during the next seven days. Running commentaries by Colonel R. H. Brand and Major C. L. Cooper-Hunt on the Challenge Round of the Davis Cup will be relayed from the Centre Court, Wimbledon, at intervals on Saturday, Monday, and Tuesday (National).

From Old Trafford, Manchester, on the same days will be heard, Nationally, commentaries on the fourth England v. South Africa Test Match by Captain H. B. T. Wakelam, who is well known to listeners for his spirited Rugger broadcasts.

LAST JUBILEE GALA.

ERIC MASCHWITZ stages the last of the Jubilee Galas on July 27th at 8 p.m. (National). This all-star programme will be headed by Noel Coward, the famous author and composer, who will give a *potpourri* from his own works. He will be assisted by Gertrude Lawrence.

EXTREME HEIGHTS.

Erna Sack, who is reputed to have the highest voice in the world, will sing some of the numbers which have made her famous, and listeners will, I am sure, be astonished at the ease with which she reaches extreme heights. Comedy is in the hands of Charlotte Greenwood, whom many will know for her humorous work in Hollywood films.

Listeners with high-fidelity receivers will be able to appreciate the tonal purity of the cornet solos by Jack Mackintosh, of the B.B.C. Symphony Orchestra.

As in the last Gala, two orchestras will be in the studio. Brian Lawrence, who is best known to listeners for his singing, will bring his dance orchestra, and there will also be Stanford Robinson conducting the B.B.C. Theatre Orchestra.

SOLOMON.

THE pianoforte recital on Sunday at 9 (Regional) is to be given by Solomon, who held the record one year for attracting the largest audience to the Philharmonic Hall, Liverpool.

BACKWOODS ENTERTAINMENT.

BIG BILL CAMPBELL, of Coo-Coo-Noodle fame, will be on the air again for another typically Canadian programme on July 29th (National), entitled "The Rocky Mountaineers." The scene will be set in a lumberjack's bunk-house. Bill Campbell takes the rôle of Old Zeke Winters, and will be heard with, among others, "The Singing Mountie" (Jerry Fitzgerald), supported by the Bunk-house Boys.

FIFTEEN-YEAR-OLD COMPÈRE

HUGHIE GREEN has reached a maturity in dramatic style, which seems incredible in a youth of fifteen.

He and his Gang return to the microphone on Monday in the National programme in "Music—Songs and Laughs." Since their first performance in a B.B.C. studio they have scored an uninterrupted success. The feature undoubtedly owes its success to the showmanship and versatility of Hughie Green himself, who seems to have all the knowledge and resource of an experienced artist. He is a brilliant compère.

FOR MOTORISTS.

THE effects department will be in full strength for the production of L. du Garde Peach's "Advanced Sparks," which includes every kind of motoring noise—pleasant and unpleasant—that may be imagined. This entertainment, which shows du Garde Peach at his wittiest, may be heard on July 30th (National) and 31st (Regional). The music to this most amusing book has been written by Ernest Longstaffe and is reminiscent of Puccini and Handel to emphasise the humour of the situation during a visit to a garage.

The cast includes Alma Vane, Kenneth Ellis, John Rorke and Don Carlos.

Noel Coward, who heads the all-star "bill" of the Jubilee Gala on Saturday night, will be assisted by Gertrude Lawrence (left), here seen in the name part from the B.I.P. film "Mimi."

Week

Outstanding Broadcasts at Home and Abroad

HIGHLIGHTS OF THE WEEK

FRIDAY, JULY 26th.

Nat., 8.40, The Mystery of the Seven Cafés.
Reg., 8, "The Judgment of Paris." 9.30, Violin Recital by Louis Godowsky. 10.10 and 10.40, Acts II and III of "1066 and All That" from Strand Theatre.
Abroad.
Vienna, 8, Vienna Philharmonic Orchestra from Bruckner Festival.

SATURDAY, JULY 27th.

Nat., 7, The Central Band of H.M. Royal Air Force. 8, Jubilee Gala.
Reg., 8, Recital: Doda Conrad (baritone) and Marie Korchinska (harp).
Abroad.
Leipzig, 8.10, Old and New Operetta Music.

SUNDAY, JULY 28th.

Nat., 7.15, Recital: Megan Foster (soprano) and Gwendolen Mason (harp). 9, Albert Sandler and the Park Lane Hotel Orchestra.
Reg., B.B.C. Theatre Orchestra with Leon Goosens (oboe). ¶Boyd Neel String Orchestra.
Abroad.
Cologne, 8, Gala Concert of Johann Strauss Waltz Tunes.

MONDAY, JULY 29th.

Nat., Ben Jonson's Chloridia from the Open Air Theatre. ¶Hughie Green and his Gang. 9, The Rocky Mountaineers.
Reg., 8, The Buxton Spa Orchestra. ¶Leslie Bridgewater Harp Quintet.
Abroad.
Kalundborg, 8, Kálmán and Lehár Concert: The Radio Orchestra.

TUESDAY, JULY 30th.

Nat., Spanish Light Music by the B.B.C. Theatre Orchestra. ¶Revue: "Advanced Sparks." 9, New Georgian Trio. ¶Organ Recital by G. D. Cunningham.
Reg., B.B.C. Chorus (A), ¶B.B.C. Dance Orchestra. 9.45, Speedway Test Match.
Abroad.
Deutschlandsender, 8.40, "An Electro-Technical Summer Night," Dance Music by the Robert Gaden and Otto Dobrindt Bands.

WEDNESDAY, JULY 31st.

Nat., B.B.C. Military Band. ¶Troise and his Mandoliers. 8.30, B.B.C. Orchestra (C), conducted by Frank Bridge. ¶Chamber Music: Narrator: Mrs. Tobias Matthay.
Reg., Alfredo Campoli Trio. ¶"Advanced Sparks." ¶Victor Olof Sextet.
Abroad.
Brussels II, 8.30, Concert from the Palais des Beaux-Arts.

THURSDAY, AUGUST 1st.

Nat., B.B.C. Dance Orchestra. ¶"The Lost Horizon."
Reg., B.B.C. Midland Orchestra. 9, A Variety of Music.
Abroad.
Toulouse, 9, Concert Version of "Sigurd" (Reyer).

CHORALES

THE Silent Service rarely makes its appearance before a studio microphone, but on Monday, in the National programme, Schoolmaster C. T. Lee, B.Sc., R.N., conducts the Portsmouth Royal Naval Singers in a programme which includes some well-known sea shanties.

Under the conductorship of Trevor Harvey the B.B.C. Chorus (Section A), with Geza Frid at the piano, will include in their programme of songs on Tuesday works by Kodaly, which are being heard for the first time in England.

A VARIETY OF MUSIC

APPRECIATIONS received after the broadcast of Brian Michie's first "Variety of Music" were so encouraging that a second date has been allotted to this form of entertainment. On Thursday, in the Regional programme, at 9, Brian Michie will, as compére, introduce among others Clive Erard, Jack Lorrimer, Ronald Hill, Doris Hare, and Freddie Gardner with his Rhythm Five. The B.B.C. Theatre Orchestra will be conducted by Mark Lubbock.

This programme consists of short turns by a succession of artists with variety as diverse as ultra-classical and barrel-organ music. Act follows act with little interruption, thus emphasising the variety.

THE LOST HORIZON

THRILLS which are not to be found in many modern stories of mountain fastnesses will be provided by James Hilton's radio adaptation of his novel, "The Lost Horizon." This will be revived on Aug. 1st (Nat.). The abduction of an aeroplane, the wild flight over the Himalayas, happenings in a hidden valley in wild Tibet, capture, escape, and final tragedy, all go to make up this thrilling drama.

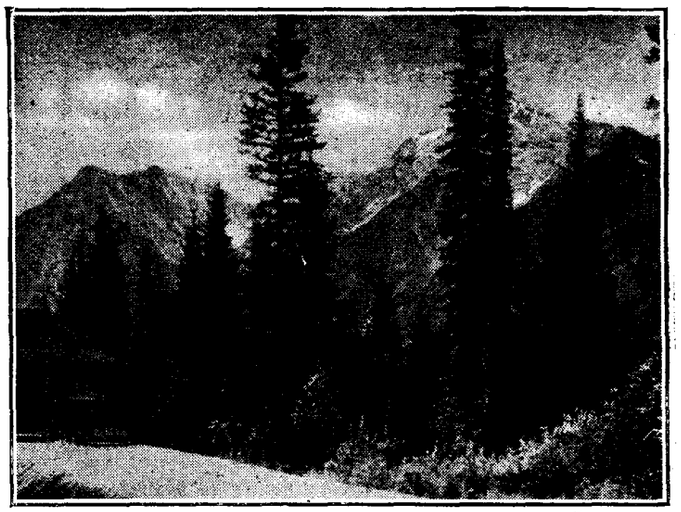

Typically Canadian mountain scenery. In a programme on Monday (Nat.), Bill Campbell, with others, will entertain from a lumberjack's bunk-house.

ANCIENT AND MODERN

A CONTRAST will be provided in the Kalundborg programme on Saturday by the inclusion, from 8 p.m., of a broadcast from the old wayside inn, Tradballehus, near Vejle, when Danish folk songs and dances led by two old fiddlers, one of whom has reached the ripe age of seventy, will be heard. At the close of this programme, at 11, follows modern dance music by Donde's band from the Hotel Royal, Aarhus.

OPERAS AND OPERETTAS

AMONG the operas in this week's programmes from abroad are Mozart's "Don Giovanni" (Munich, Wednesday, 7), relayed from the Residenz Theater, Munich, where the composer conducted some of his own works. A concert version of "Sigurd" (Reyer) is featured by Toulouse at 9 on Thursday.

Operettas: "Betrothal by Lanternlight" (Offenbach), Beromunster, to-night at 9.10. Abraham's "Ball at the Savoy" is included in Vienna's broadcast to-morrow (Saturday) at 7.35.

CAMP RELAYS

THE Jubilee Camp of Danish Boy Scouts near Copenhagen provides a camp-fire broadcast from Kalundborg on Sunday at 8.30.

All German stations on Wednesday at 8.15 will relay an evening celebration in the Hitler Youth Camp by members of the German Girls' League camping on the amber coast of Eastern Prussia. This is the coast where amber is found and does not refer to the colour.

THE HOLIDAY SPIRIT

THROUGHOUT the day on August 1st Swiss stations will be celebrating the Swiss National Holiday by appropriate programmes.

THE AUDITOR.

Regional listeners will have the opportunity of enjoying the thrills, and spills, of dirt-track riding on Tuesday at 9.45, when an eye-witness account of the fourth official Speedway Test Match between England and Australia will be given from the West Ham Speedway Stadium.

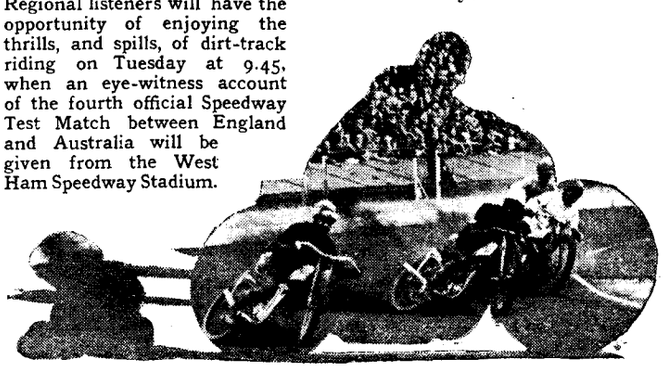

30-LINE TELEVISION

Baird Process Transmissions.
Vision, 261.1 m.; Sound, 296.6 m.

MONDAY, JULY 29th.
11.15—12.0 p.m.

Laurie and Tom Devine (Dances); The Lucerne Skaters; John Rorke (Songs); First Television Broadcast of Kitty Masters, Dance Band Vocalist; Sydney Jerome's Quintet.

WEDNESDAY, JULY 31st.
11.0—11.45 p.m.

Illustrated Natural History Talk—Television of Birds, Animals, Reptiles and Fish, introduced by Mr. D. Seth Smith (The Zoo Man) from the Zoological Gardens.

McMichael 235

Fine Quality in a Moderately Priced Superhet

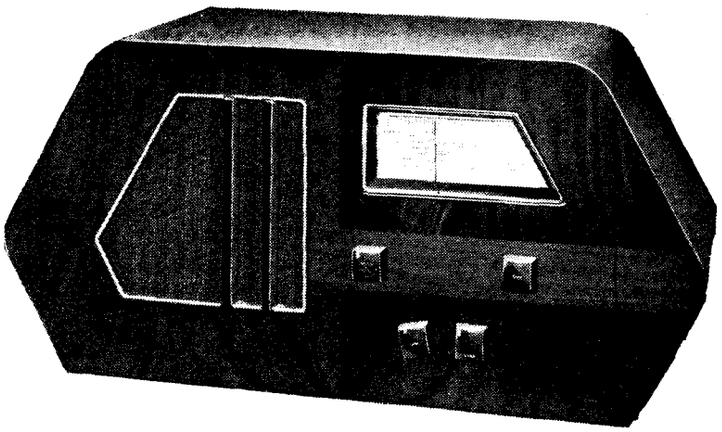

FEATURES.—***Type.***—*Table-model superheterodyne for AC mains.* ***Circuit.***—*Triode-pentode frequency-changer—var.-mu pentode IF amplifier—double-diode-pentode combined second detector and output valve.* ***Controls.***—*(1) Tuning. (2) Volume and on-off switch. (3) Waverange. (4) Tone.* ***Price.***—*12 guineas.* ***Makers.***—*McMichael Radio Ltd., Slough, Bucks.*

THIS is the first superheterodyne to be produced by McMichael at as low a figure as 12 guineas, and while economies have been effected by the simplification of the circuit and chassis construction, no compromise has been made with the quality of reproduction or general finish, for which this firm already has a justifiable reputation.

The quality of reproduction is, in fact, outstanding, and apart from any other aspect of the performance should justify the interest of the discriminating buyer. The essential qualities of clarity and fullness of tone, which are often difficult to reconcile, are both present, and the bass response is amazingly good for a set of such moderate dimensions. The quality, in fact, is reminiscent of a moving coil unit working in conjunction with a flat baffle of considerable area. Such a result might lead one to suspect cabinet resonance, but if the designers have evoked its aid in any way it has been used with skill, for there is no obvious resonance in the bass or middle register.

A noteworthy feature of the performance is that the good quality is not confined to the local stations, and it is quite easy to deceive anyone who is not in a position to see the dial into thinking that the reproduction from many of the principal European broadcasting stations is coming from the local transmitter.

Although at the price the set cannot be expected to be fitted with circuits for inter-station noise suppression, the manner in which all the worth-while programmes stand out from the background is reminiscent of the performance of receivers in which this refinement is included.

Long-wave Performance

Another commendable quality of the performance is the uniformity of the sensitivity over both wavebands, and once again the excellent long-wave performance which we have noted in previous McMichael sets is in evidence. The selectivity is also exceptionally good on long waves, and, with the tone control turned down slightly from the "brilliant" position, reception of the Deutschlandsender free from side-band interference and at quite exceptionally good volume is obtained.

On the medium waveband in Central London adjacent-channel selectivity was obtained on the Brookmans Park National transmitter, and if this is not possible on the Regional programme the interference does not extend over more than 1½ channels on either side of the normal setting.

Second-channel interference is negligible, and it was only after careful search that two feeble self-generated whistles were detected in the vicinity of 485 and 1,200 metres.

The automatic volume control keeps a firm hand on the more powerful stations to prevent overloading of the output stage, but there was perhaps a wider difference between the volume from London Regional and, say, the Midland and West Regional transmitters than we have noticed in other sets of similar type. However, for all normal listening it is easy to find an average setting for the manual volume control which adequately covers these differences.

Only three valves are used in the superheterodyne circuit, and the triode-pentode frequency-changer is preceded by a band-pass filter in which the coils are mounted at a suitable distance apart on a common cylindrical former. The filter includes a

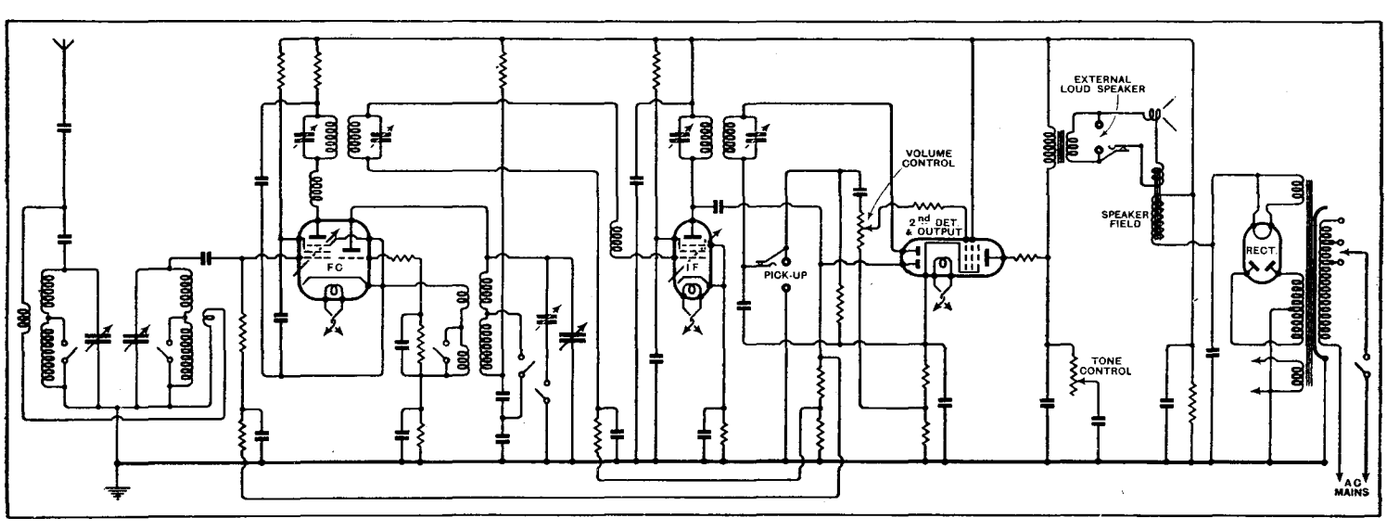

The employment of a double-diode-pentode in the output stage reduces the number of valves in the circuit to three. An image suppressor coupling is incorporated in the band-pass input filter.

McMichael 235—
neutralised circuit for suppressing second-channel interference. A variable-mu pentode IF amplifier follows the frequency-changer, and its output is fed to the diodes of a double-diode-pentode combined second detector and output valve, one diode being employed for signal rectification and the other for the AVC bias. The output circuit of the pentode incorporates a variable tone control, and the secondary of the output transformer includes a jack switch for connecting an external loud speaker of the low-impedance type. When the plug is first inserted both the internal and external loud speakers are in operation, but when the pins are pushed fully home the internal loud speaker is disconnected.

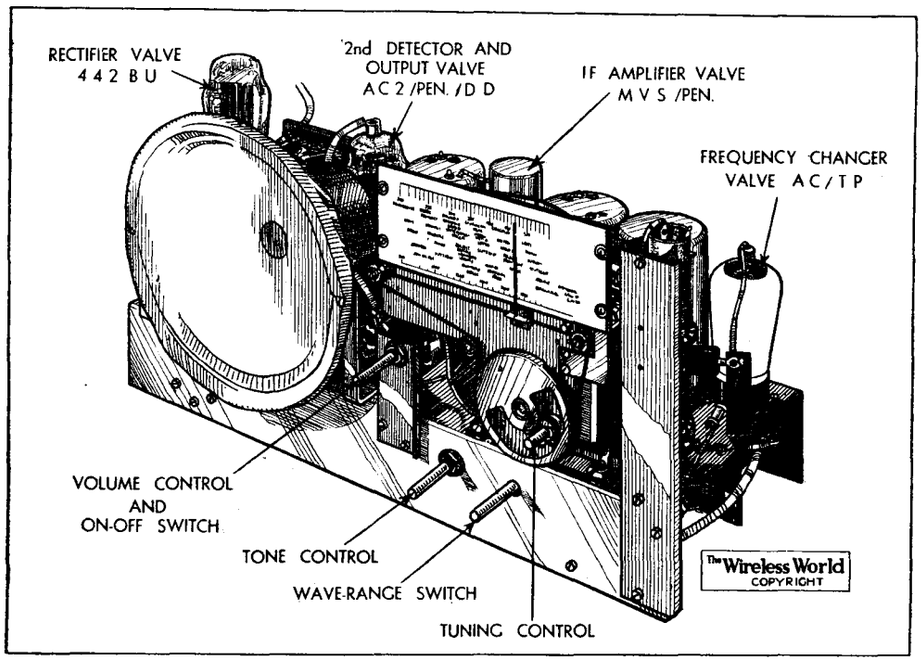

A long narrow chassis is dictated by the lines of the cabinet, and the moving-coil loud speaker is built into the chassis to form a single unit.

Provision is also made for a gramophone pick-up, and here again a switch type of jack makes the necessary alteration in the circuit. The input is taken directly to the grid of the output pentode, and although the amplification factor of this valve is high, it is advisable to make use of a high-output pick-up of the piezo electric type.

The cabinet is of original design, and the long, narrow chassis dictated by its form lends itself to a simple type of channel construction with open ends. As the loud speaker is mounted on the chassis it is a simple matter to remove the complete unit for inspection and test.

The rectangular tuning scale is illuminated from behind, and each dial is hand calibrated with sloping lines drawn at the back of the scale which intersect the printed station names on the front. The exact setting of each station is clearly visible when the dial is illuminated.

There can be no doubt that this set marks a distinct advance in the quality of reproduction offered in moderately priced sets, a factor which alone should be sufficient to ensure its success.

Random Radiations

By "DIALLIST"

Television Delays

THOUGH I don't for a moment cavil at the choice of the Alexandra Palace as the site of the London high-definition television transmitting station—particularly as it will mean far better reception in my locality than could have been hoped for from the Crystal Palace—I can't help feeling it a pity that the existing Baird station should not be brought into temporary use for the provision of a television service. So far as one can see, a good many months must elapse before we can hope for the first transmissions from the Alexandra Palace. Very considerable alterations will have to be made in the building, and the installation of the two transmitting plants and of the aerial system will all take time. A further point worthy of consideration is that the service area of the Crystal Palace station is not problematical; a contour map of field strengths from this station was published in *The Wireless World* some time ago. If it could be brought into use to give a temporary service I have not the slightest doubt that the results would be beneficial. Public interest would be stimulated, and the radio industry would have full opportunities for experimental work. Even an hour of television programmes on two or three evenings of the week would be welcome as a sample of what is to come later on.

Amateur Hours

AN entirely new idea in broadcasting comes from the United States of America, where those who look after the programmes of the big "chains" are always on the look-out for novelties. They are now conducting "Amateur Hours," a scheme which is proving, for the moment at at any rate, very popular with listeners. Anyone who thinks that he is a born broadcaster has only to communicate with one or other of the studios to be given a trial before the microphone in one of these hours. In the studios there is a Master of Ceremonies complete with gong, and listeners are asked to record their verdicts by telephone. If any turn is obviously hopeless the gong goes and the microphone switch is turned over. Others are left entirely to the judgment of listeners, and when a strongly favourable vote is received the amateur artist stands a good chance of obtaining a contract.

There's a good deal in the idea; it does, for instance, provide programme directors with a mine of possible material in which to delve. For my part, though, I hope that it will not be tried in this country, for one impression that one gains from the average variety programme as broadcast here is that we already have to listen to far too many performers who are amateurs at the game.

The Naval Review

I WAS not able to hear the entire broadcast of the Naval Review at Spithead—one must do some work sometimes!—but what I did hear was most impressive. The B.B.C. were wise in choosing two naval officers to do the job, for only commentators who know all the ropes could possibly help listeners to capture the proper atmosphere. Commander Stride and Lieutenant-Commander Woodroofe gave us a fine word picture between them, and our best thanks are due to them.

As I anticipated, the technical side of the broadcast did present some difficulties. Owing to the use of the short-wave link there was a certain amount of fading at times, though never when I was listening was it serious enough to interfere much with the relay. The only thing that didn't seem quite to "come off" whilst I was listening was the fly-past of the Fleet Air-Arm. We were told that we would hear the noise of the planes as they swooped in salute, but actually only a faint murmur came through from their propellers and exhausts in most cases. The Ospreys, very fast machines, did manage to produce a faint roar, but the others were disappointing from the listener's point of view. One would have thought that, in view of the Outside Broadcast Department's experiences of relaying air events, something better might easily have been achieved.

The King's Prize

THERE is one broadcast that I scarcely ever hear, for the very good reason that I am usually not very many yards away from the man who makes it—thought I have no part in the business. This is the running commentary on the final stage of the King's Prize for rifle shooting which is relayed from Bisley on the last day of the National Rifle Association's meeting. It is one of the best done of the sporting commentaries, for the difficulties to be overcome are very great. There are fifty targets, each with two competitors firing alternately upon it. The whole firing line extends for about 200 yards, and it must be a very hard business for the commentator to keep listeners in touch all the time with what is going on. Thanks to an excellent system, which includes chain of messengers to and from the "Land Liner" in which he has his eyrie, he is able to give a remarkably graphic and thrilling account of the proceedings. For years now the commentator has been Captain E. H. Robinson, who himself won the King's Prize more than a dozen years ago.

BROADCAST BREVITIES

By Our Special Correspondent

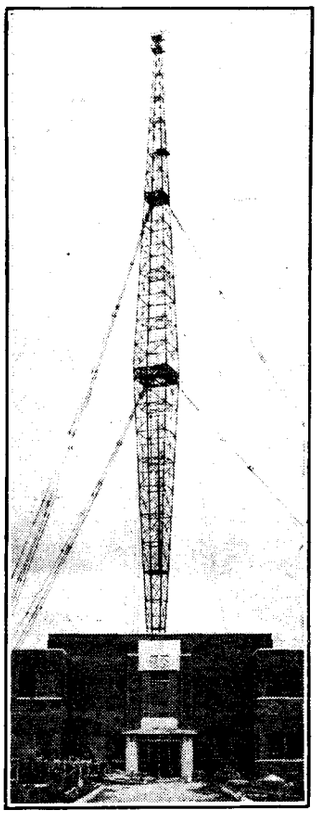

New technique in B.B.C. mast design, at Lisburn, N. Ireland.

Continental Practice

THE work of erecting the new station at Lisburn, Northern Ireland, is well in hand, and the inclusion of only one 500-ft. mast of an unusual type has caused a certain amount of comment. This is the first time that the B.B.C. has made a departure from its standard practice of using two masts to support the aerial. In the present case the mast, which is an improvement on the types now in use in America and on the Continent, is utilised as the aerial. Should this prove an advantage over the present aerial systems, it is quite possible it will be applied to other stations.

"Lisburn Testing"

I think it is safe to say that this, the last but one of the stations to be erected under the original scheme of high power transmitting stations, will come on the air in the Spring of 1936. The remaining station is that to be built at Newcastle.

B.B.C.'s Bus Fleet

IT may not be generally known that the B.B.C. runs a fleet of buses, to a very comprehensive schedule, between Broadcasting House and its many offshoots. It has been stated that the fleet is at the disposal of artists, but it is primarily for the use of the staff, enabling its members to travel from headquarters to such places as Studio No. 10 and the Research Departments at Clapham and Balham with the minimum of delay.

The buses will, of course, become still more useful when the Maida Vale studios are completed.

New Studios

The reconstruction of the old skating rink at Maida Vale into modern broadcasting studios is progressing rapidly, and it is estimated that the four studios, in addition to the orchestral studio already in use, will be ready by the end of the year. Of these it is almost certain that Henry Hall and the B.B.C. Dance Orchestra will occupy one, with a suite of offices attached. The others will be utilised for such broadcasts as those by the Theatre Orchestra, Quintets, and such *ensembles*.

The Re-shuffle

ANOTHER appointment yet to be made in the B.B.C. reorganisation scheme is that of a successor to Mr. Cecil Graves, who was Empire and Foreign Services Director before his promotion to Controller of Programmes.

The Empire service will be handled by one of the Assistant Controllers, probably Mr. Gladstone Murray, acting, of course, under Mr. Graves. The compilation of programmes, etc., it is expected, will be carried out by Mr. J. Beresford Clark, who, since leaving Manchester, has done some excellent work in the Empire department, especially during Mr. Graves' indisposition and subsequent visit to the U.S.A., Canada and Newfoundland. Mr. Clark will have direct access to the new Controller, Mr. C. Graves, incidentally, his old chief.

As Others Hear Us

In an interview, Mr. Graves said that he was very interested to meet in Canada and Newfoundland a number of listeners to the B.B.C. Empire station and to listen himself to the programmes for which he has been responsible since the Service started in December, 1932.

He found that reception was possible with an excellent degree of volume and clarity in both countries.

Representation in the House

ACCORDING to gossip in the radio world, there is a suggestion that the B.B.C. should have a Cabinet Minister to answer all broadcasting queries raised in the House. On enquiry at Portland Place I learn that this is a rumour without foundation.

It has, you will remember, often been stressed that we should have, as on the Continent, a Minister of Fine Arts who would, of course, be the one to take Broadcasting in his portfolio.

If the Ullswater Committee recommended that the B.B.C. should be made a Government department, and the recommendation were accepted, the Director-General might then become a Cabinet Minister, but, of course, a Cabinet Minister's salary is only £5,000 a year.

Brighter Morning Programmes

I MUST offer my congratulations to Kneale Kelley for hitting upon the happy idea of introducing programmes by the Variety Orchestra during the morning session on three consecutive Fridays—August 23rd, 30th, and September 6th. This is decidedly a good move, as it tends to enliven the morning programmes.

It is to be hoped that this innovation may continue, and as an alternative to the Variety Orchestra why not Stanford Robinson and the B.B.C. Theatre Orchestra?

Dance Music Control

DAME RUMOUR has been busy again. Her latest story is that there is to be a Director of Dance Band Music, who will have control of both studio and O.B. dance bands.

This speculation may have arisen out of the fact that from October 1st the new Variety Director will take over control of relays by outside dance bands. Mr. Maschwitz, I know, wants to try and prevent the recurrence of the same tune several times in one day.

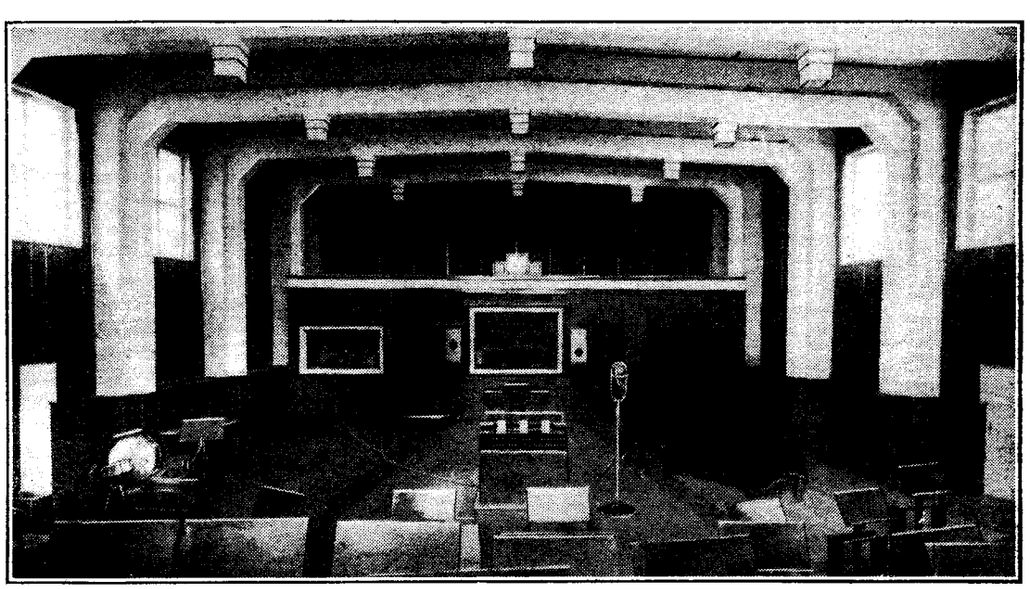

MODERN STUDIO DESIGN.—Budapest's largest orchestral studio recently completed includes arrangements for television transmissions.

New Apparatus Reviewed

Recent Products of the Manufacturers

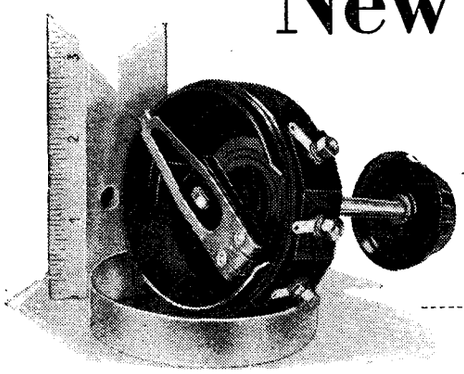

Reliance power potentiometer rated for 15 to 20 watts maximum dissipation.

RELIANCE POWER POTENTIOMETER

THE RELIANCE MANUFACTURING Co. (Southwark), Ltd., 8, Westbury Road, Walthamstow, London, E.17, include in their range of variable resistances and potentiometers a model described as the P.I.W. designed for power work and having a rating of between 15 and 20 watts maximum dissipation. The standard models range from 5 ohms to 500,000 ohms with a tolerance of plus or minus five per cent. and all are wire-wound, the winding being supported on a bakelite former and fixed in position by an elastic compound that allows for expansion and contraction of the wire yet always maintains the turns securely anchored.

This model is made with graded or linear resistance elements and also tapped if required. In the standard models the spindle is insulated from the moving contact, but it can be electrically joined thereto should this be required for any particular purpose.

The P.I.W. potentiometer is essentially a precision component for the workmanship is of the best. A long stout contact arm is fitted, one end rides on the edge of the resistance element, the other bears against a pick-up ring joined to the centre one of the three terminals.

The action is extremely smooth, and in view of the large diameter—the bakelite case measures 2¾in. across—precise and reliable potential division is possible.

Prices range from 9s. to 15s. 9d. each, which is very reasonable considering the high-grade nature of the component.

NEW EDDYSTONE COMPONENTS

STRATTON AND CO., LTD., Eddystone Works, Bromsgrove Street, Birmingham 5, has just introduced a number of new and interesting short and ultra-short wave components.

By a slight modification, the air-dielectric trimmer of 65 m-mfds. has been converted into a real midget variable condenser of this capacity. The modification comprises extending the rotor shaft, but it is adjustable from either end, as before, by means of a slot in the end of the spindle. In its new form it costs 4s. 3d. complete with knob and escutcheon plate.

A miniature reduction drive mechanism, described as a Slow Motion Head, is a new development. It gives a 9 to 1 reduction, is made of brass and designed for panel fitting. From the back spindle a flexible coupling drive can be taken to the condenser, or volume control, which need not be in line with the slow-motion mechanism. It is an extremely useful fitment for use where difficulty in reconciling circuit requirements with a pleasing panel layout is encountered in planning a new set. The price is 3s. 3d.

There is a new IF transformer for 450 kc/s circuits, having Litz-wound coils and air-dielectric trimmers. It is enclosed in a rectangular metal case 3in. x 2in. x 3⅜in. high, and costs 13s. 6d. We hope to give further details of this later when our tests are completed.

The other items comprise two HF chokes, one for 3 to 10 metres and the other for 5 to 90 metres, costing 1s. 3d. and 2s. each respectively; a flexible coupler using a ring of DLG material costs 1s. 6d., whilst a 4in. extension rod ⅜in. in diameter and fitted with brass end-pieces, is available for 1s. 3d. A new adjustable insulated bracket for condensers and the like costs 1s. 6d.

On the whole, a very interesting selection of new components, many of which will find application in television receivers.

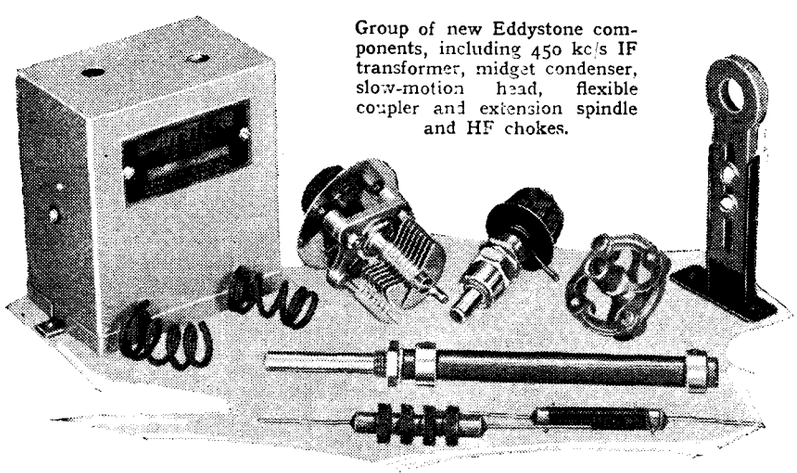

Group of new Eddystone components, including 450 kc/s IF transformer, midget condenser, slow-motion head, flexible coupler and extension spindle and HF chokes.

SHAFTESBURY "BIO-TRAN" MICROPHONE

THE new "Bio-Tran" microphone developed by Shaftesbury Supplies, 224, Shaftesbury Avenue, London, W.C.2, is an improved version of their transverse-current microphone, the latest modification made being the introduction of a third electrode. With this is used a special microphone transformer, described as the Z model, and having a tapped primary winding; the polarising battery is joined between the tapping and the new electrode in the microphone.

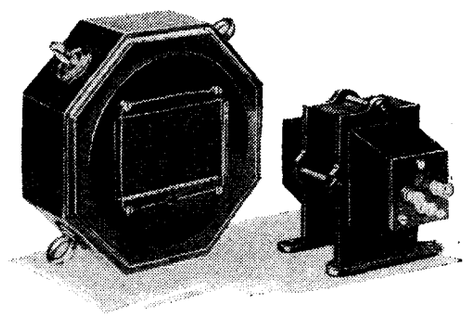

Shaftesbury new "Bio-Tran" microphone and shrouded Z type transformer.

These changes have resulted in a considerable reduction in the microphone's resistance; thus it operates at a lower voltage, and during our tests it worked extremely well from a 2-volt battery. With this voltage a current of 20 mA. passed through the microphone, while four and six volts give polarising currents of 40 and 60 mA. respectively.

The new model is definitely more sensitive than the earlier pattern and it has a better frequency response, giving a good output up to 10,000 c/s, this being the upper limit of the audio scale explored. The low-frequency output is good also.

Tests on orchestral passages and on speech fully confirmed the good opinion we had formed from the response to pure tones.

The background hiss is exceptionally low, which is all to the good, despite the fact that actually less amplification will be needed with this model, since it gives a larger output than its prototype.

On the whole, it is a sound and well-made instrument, being beautifully finished in chromium plate, and it costs 55s. only.

The special Z type transformer is available at 10s., shrouded as illustrated, or 7s. 6d. as an open type.

Stands, chromium plated to match, cost 15s. for a table model and 27s. 6d. for a floor type.

Next Set Review—

FERRANTI NOVA

FOUNDATIONS OF WIRELESS

Part XXIX.—Power for the Set

By A. L. M. SOWERBY, M.Sc.

THIS is the concluding instalment of a series of articles which has dealt with the theory of wireless reception from its basic foundations of elementary electricity and magnetism to such modern refinements as AVC and quiescent output systems. This Part explains the principles underlying the use of mains power for energising a receiver.

THE discussion of some of the many possible schemes for providing automatic volume control, with which the last Part was mainly concerned, concludes our analysis of the operation of the various sections of a receiver.

So far we have taken for granted the existence of the various sources of power for the set, generally assuming that batteries are to be used. While there are an enormous number of battery-driven sets still in service, the modern tendency is to make use of the supply mains where these are available.

There are no fundamental differences between mains-driven and battery-driven sets, but in matters of detail differences are many. They arise through three main causes. First, power from the mains is cheap, while that from batteries is relatively extremely expensive. Secondly, valves designed for mains-driven sets tend to be considerably more efficient than their counterparts for battery sets. The third distinction depends on the fact that in a mains valve the cathode is independent of the heater, while with battery valves the filament does duty for both heater and cathode. This apparently small difference accounts for quite a large number of small points in design.

In a battery-driven set the filaments of all valves are connected together in parallel, and the necessary power to heat all of them is derived from a single 2-volt accumulator cell. The filament current taken by the valves depends on the anode current they are likely to be called upon to deliver; 0.1 amp. is usual for detector valves, screened valves for HF amplification may take 0.15 to 0.2 amp., and output valves usually 0.2 amp. at least. The power used for heating the filament of a valve is therefore from 0.2 to 0.4 watt, or a little more in some cases. An average accumulator will supply an ampere for some 20 hours on one charge (a "20 ampere-hour" cell); this is equivalent to running a 3- or 4-valve set for some 40 hours, which may represent a week or a fortnight of ordinary use.

Valves designed for mains operation are of two types; those intended for AC-driven sets and those meant for the newer "universal" sets that run indifferently from AC or DC. In the former class the heater usually consumes 1 amp. at 4 volts, though a 2-amp. heater is now becoming quite usual for output valves. The power used for heating is thus 4 to 8 watts, or twenty times as much as is used in battery valves. These 4-volt AC valves are used with their heaters connected in parallel, the power for all the valves in a set being taken from a transformer which steps the voltage of the mains down to the required figure.

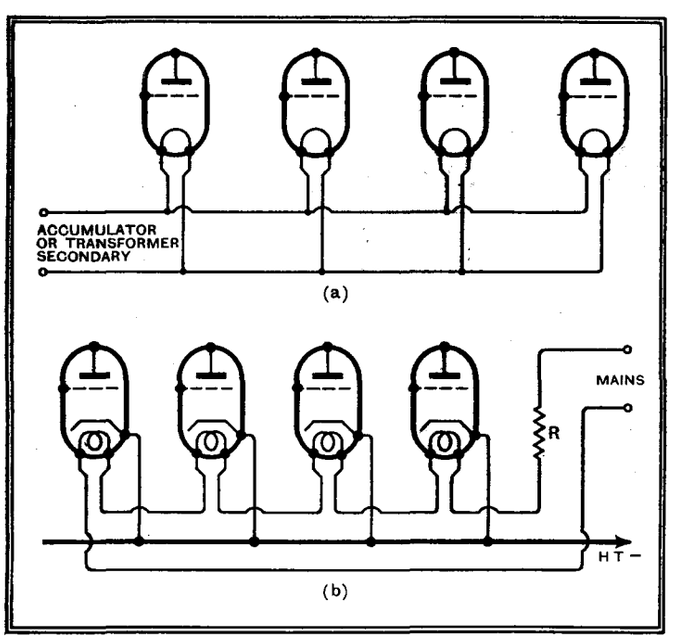

Fig. 154.—Diagram (a) shows method of heating filaments of battery valves or heaters of AC valves in a 4-valve set. All valves require the same voltage. In diagram (b), which shows DC or universal valves with heaters in series, all take the same current. Note that in spite of different potentials of heaters all cathodes can be joined to HT−.

Allowing for loss in the transformer, the heaters of a 3-valve set (16 watts) could be energised for fifty hours for the cost of one "unit" (kilowatt-hour) of electricity, so that the currents taken, though large by battery-set standards, are not by any means uneconomic.

Where DC mains are used, or where it is desired to dispense with the transformer, the heaters of all the valves are connected in series across the mains. For the sake of economy the valves are designed to operate at a low current (usually 0.2 amp.), and the voltage across each at this current varies from 13 to 40 volts, according to the wattage it is deemed necessary to dissipate in the heater. The larger voltages, of course, are required by the valves taking the largest anode current; i.e., the output valves. A resistance of the right value to drop, at 0.2 amp., the voltage by which the mains exceed that required by the valves is included in the circuit as at R in Fig. 154 (*b*).

In this arrangement the power in watts consumed by the filament circuit as a whole is equal to one-fifth of the voltage of the mains, irrespective of the number of valves. With more valves R is reduced, so that less power is dissipated in it and more in the valves.

The greatly superior area of a cathode as compared with a filament, together with the fact that the whole of it is at the same potential, enables the mains valve to have a slope nearly double that of a corresponding battery valve. Further, the greater rigidity of a cathode allows the grid to be brought closer to it, this contributing further to high slope. One may, in consequence, quite fairly expect a mains set to be considerably more sensitive than a battery set of corresponding design.

In the case of a battery set it is usual to provide a separate battery for providing the voltages at which the grids of the various valves are set. The positive side of this battery is connected to the negative side of the filament

Foundations of Wireless—

battery (LT–), and the grid return leads of the various valves are connected to suitably-chosen tappings on the battery, as shown in Fig. 132 (Part XXIV).

Self-bias Circuits

Bias in a mains set is derived in all cases from the HT supply. If we insert a resistance (R, Fig. 155 (*a*)) between the cathode of a valve and HT negative, the whole space-current I of the valve[1] has to flow through it. In so doing it makes the cathode positive by IR volts with respect to earth. If now we return the grid to earth, as in the diagram, it will be negative to the extent of IR volts with respect to the cathode.

The condenser C is placed across R because the latter is included both in the anode-cathode and in the grid-cathode circuits of the valve. Amplified signal currents in the anode circuit, in flowing through it, will therefore introduce a signal-voltage back into the grid circuit. This voltage is in opposition to that due to the original signal; "degeneration," or reduction of amplification by reverse reaction, therefore, occurs. By making C large enough (50 mfds. is common) this effect can be entirely avoided except for the very lowest audio-frequencies.

When several valves in a set require the same bias, some saving of components results by connecting all their cathodes together and inserting R and C in the common cathode circuit, as in Fig. 155 (*b*). (In this circuit anode and grid resistances stand for couplings in general.) Alternatively, R may be placed in the common negative lead of the set; this is useful where the valves to be biased are controlled by the AVC system, for the change in their space current is a small proportion only of the total current of the set.

It is the ease of providing generous anode currents in a mains set that gives the latter its main advantage over the battery set. The ordinary HT battery, usually of 100 to 120 volts, is an expensive item. At best its life is not long, and the voltage it gives drops well below the nominal voltage very early in its life. Furthermore, the expense of these dry batteries rises very rapidly with increasing current; a battery called upon to deliver 20 mA. will not have anything like half the life it would have if delivering 10 mA. One may reckon that a unit of electricity costs from thirty to fifty shillings when supplied by an ordinary dry battery, whereas from the mains it would probably cost less than one shilling even after allowing for all incidental losses. One sees, therefore, that only low power can be dissipated in the anode circuits of a battery set if costs are not to become prohibitive. Only low power, in consequence, is available to drive the speaker, and the output valve has to be kept always on the verge of overloading for the output of sound to be acceptable.

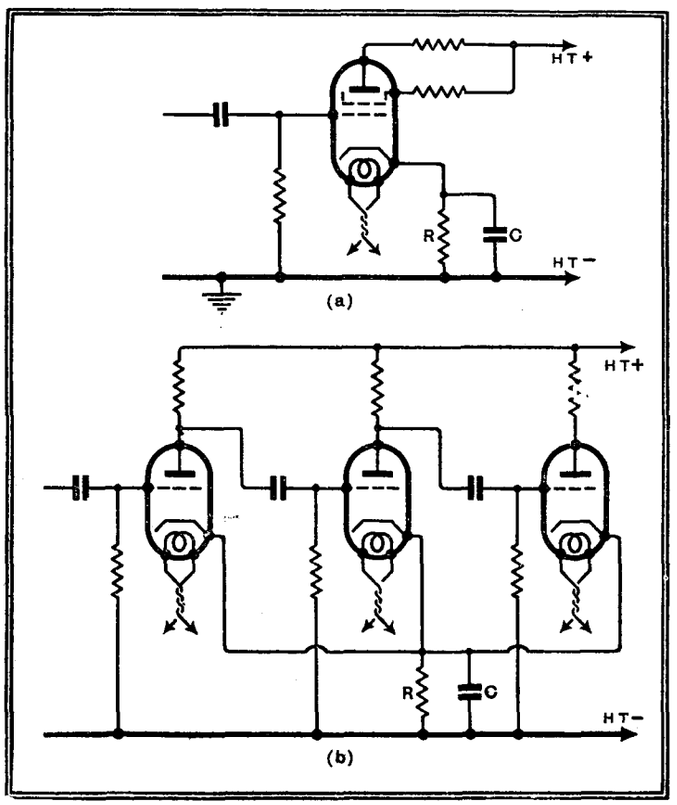

Fig. 155.—Diagram (a) shows a true self-bias circuit, where the passage of anode current through R makes the cathode positive with respect to HT– ; in consequence, the grid is made negative with respect to cathode. In diagram (b) all valves are similarly biased to an equal extent by the voltage drop across R in their common cathode lead.

[1] The "space current" is the total of all currents to anode, screen, suppressor, and any other electrodes there may be.

When using the mains power is abundant and cheap; the problem lies in making use of it. The fifty-cycle alternations of AC mains, if allowed to reach the signal circuits of the set by any path, will produce a 50-cycle note (deep hum) in the speaker. Before we can use it we therefore have to convert the current *completely* from alternating current to direct.

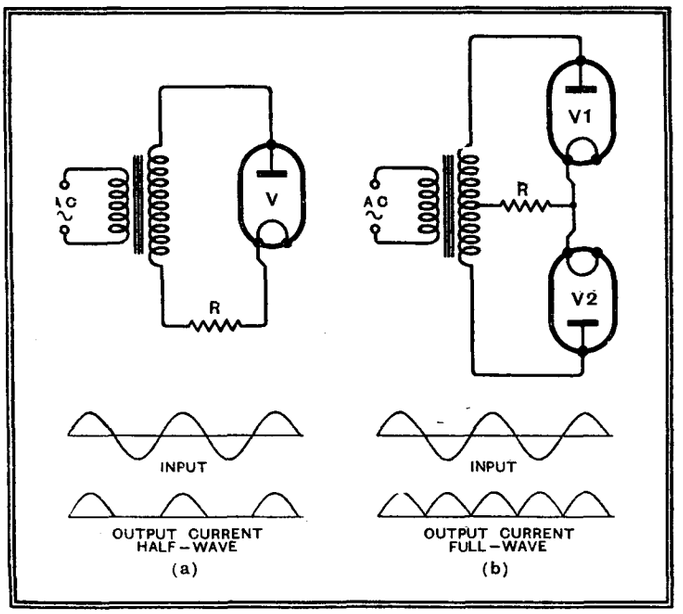

Fig. 156.—Half-wave and full-wave rectification. In (a) V acts literally as a valve, suppressing alternate half-waves; in (b) there are in effect two transformer secondaries, phased so that the pulses through V1 come between those through V2.

This conversion is known as *rectification,* and is performed with a two-electrode valve. Fig. 156 shows, better than could any amount of description, how *half-wave* rectification (at (*a*)) and *full-wave* rectification (with two valves, as at (*b*)) are carried out. In either case the result is a series of pulses of current all in the same direction, which we can equally well describe as a direct current with an alternating current superposed upon it. Freedom from hum can only be had if the alternating component is completely suppressed.

Smoothing Circuits

If we place a condenser of large capacity across the resistance R a good deal of the alternating current will be diverted through the condenser. As a result the current through R is *smoothed,* taking on a waveform such as that in Fig. 157 (*b*). This, it

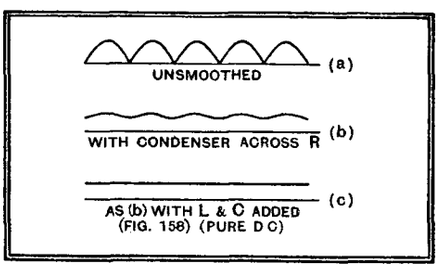

Fig. 157.—Showing how the alternating component can be removed from the crude rectified current.

Foundations of Wireless—

is evident, is a much nearer approach to pure direct current, which would be represented by a horizontal straight line. By adding a choke and a second condenser to the circuit, as shown in Fig. 158, the small residue of alternating current is almost entirely removed, and the system of that figure can very satisfactorily be used to supply anode current to a set.

It is to be noticed that the full-wave rectifier V, containing a cathode and two separate anodes, draws its filament or heater current from the same transformer that provides the anode current. For the heaters of the various valves in the set proper still another winding would be used, a common primary winding energising, through the iron core, as many secondaries as may be required for the entire receiver.

In a battery set suitable voltages for the screens of SG valves, and for any other points requiring less than the maximum voltage, can be obtained by connecting to suitable tapping-points on the battery. Since there is only one voltage available in a supply unit such as that drawn, it becomes necessary to utilise the voltage-drop across a resistor if lower voltages are required. For screen-grid valves it is usual to provide a potentiometer consisting of two resistances connected in series across the whole voltage, and to connect the screen, together with its by-pass condenser, to the junction point of the two. For screened pentodes, in which the screen current is larger and varies less from valve to valve, it is usually satisfactory to connect the screen through a resistance to the main positive line.

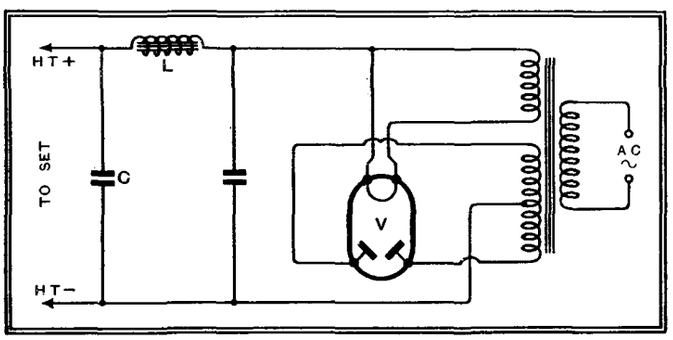

Fig. 158.—Complete HT supply system for AC set. (Note that the set itself replaces the load resistance R of Fig. 156.)

In the majority of mains-driven sets the loud speaker is of the "energised" moving-coil type, requiring the dissipation of some five to ten watts in the windings of the electro-magnet used to provide the magnetic field in which the coil moves. The inductance of a winding of this sort is quite high, and it is convenient to place it in series with the main HT lead in such a way that the total anode current drawn by the set passes through the winding and energises it. It then serves also as a very satisfactory smoothing choke, taking the place of that shown in Fig. 158. The voltage dropped across it is made up by increasing the alternating voltage applied to the rectifier V.

In the case of receivers intended to be run from DC mains, rectification is no longer necessary, but owing to the fact that the current is generated by rotating machinery it contains a small alternating component. To prevent hum this must be removed; the smoothing choke and condensers are therefore retained. In this type of set it is usual to put the speaker field directly across the mains, since too much of the available voltage is wasted if it is used as a smoothing choke. Sometimes, however, it is used in place of R (Fig. 154 (*b*)) in series with the heaters.

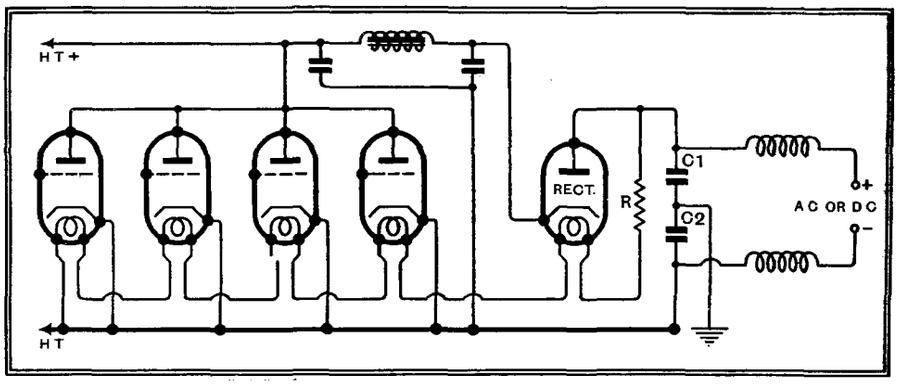

Fig. 159.—Power supply circuit of a typical universal set.

Universal sets, running indifferently from AC or DC mains, are arranged as in Fig. 159. As in DC sets the heaters of the receiving valves are in series; in addition, there is included in the circuit the heater of an indirectly heated rectifier. On AC mains this acts as a half-wave rectifier, while on DC mains it is a "passenger," doing no more than add a small resistance in the HT line. Both universal and DC sets are inclined to be a little limited in output on account of the comparatively low anode voltages available; in neither case, of course, can a transformer be used to raise the voltage above that of the mains.

The HF chokes and small condenser C1 and C2 included in Fig. 159 are very necessary in both universal and DC sets; they prevent high-frequency disturbances due to electrical apparatus connected to the mains from reaching the set. In an AC receiver their place is usually taken by an earthed screen between primary and secondary of the transformer.

The impedance to signal-frequency currents of the smoothing and rectifying circuits in a mains-driven receiver is considerably higher than that of a battery in good condition. Since this impedance is common to the anode circuits of all valves in the set it tends to couple them all together, and may set up instability of one sort or another. When this unfortunate state of affairs arises *decoupling* is resorted to. As shown in Fig. 160, a resistance R is inserted in the anode circuit of such valves as require it, and a condenser C is connected from the high-potential side (from the signal-frequency point of view) of this resistance to earth. Condenser C then completes the anode circuit for signal-frequency currents, while R prevents any appreciable portion of these currents from finding their way back into the anode-current supply system. The larger C and R, the more complete the decoupling, which depends on the product CR.

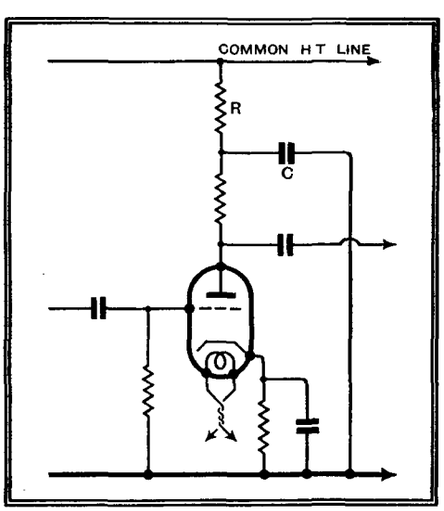

Fig. 160.—Decoupling a valve from the HT line is performed by inserting R to block signal currents, and providing C to give them a path back to earth.

CONCLUSION

Already, perhaps, this series has exceeded its original scope and has left foundations far behind. Here it ceases, having applied fundamental theory to all the main points of receiver design. If there be any reader so stout-hearted as to wish for more he is referred to the reviews of receivers appearing regularly in these pages. There, in the circuit diagrams and in the text, he will find ample material upon which to exercise his knowledge of the fundamental principles upon which all wireless sets are built.

EDITORIAL NOTE.—Instalments of this series appeared in the following issues of *The Wireless World*:—November 9th, 16th, 23rd; December 7th, 14th, 21st, 28th, 1934. January 4th, 11th, 25th; February 1st, 8th, 22nd; March 1st, 8th, 22nd, 29th; April 5th, 12th, 26th; May 3rd, 10th, 17th, 31st; June 14th, 21st; July 5th, 12th, 19th, 1935.